AMATEUR RADIO

FEBRUARY 1965

5PS! See story on page 22.

Vol. 33, No. 2

2/6

Registered at G.P.O., Melbourne, for transmission by post as a periodical

NEW VALVES AT BARGAIN PRICES

1A3	2/6	10 a £1	2C46	15/-		6BE6	15/-		6SF5	7/6	3 a £1	12AH7	5/-	5 a £1	808	10/-		EF39	5/- 5a £1
1A5	5/-	5 a £1	2D21	12/-		6BQ5	17/-		6SF7	7/6	3 a £1	12AT7	12/-		809	20/-		EF50 (VR91)	
1C7	3/-	7 a £1	2X2	5/-	5 a £1	6C4	5/-	5 a £1	6SH7	4/-	6 a £1	12AU7	15/-		830B	15/-		and socket	3/6
1D8	7/6	3 a £1	3A4	22/-		6C6	5/-	5 a £1	6SJ7	12/6		12AV6	7/6	3 a £1	866	25/-		EF70	5/- 5 a £1
1F5	10/-		3A5	10/-		6C8	10/-		6SK7GT	20/-		12BE6	7/6	3 a £1	954	5/-	5 a £1	EF72	5/- 5 a £1
1H5	7/6	3 a £1	3S4	10/-		6CM5	25/-		6SL7WGT	12/6		12C8	5/-	5 a £1	955	5/-	5 a £1	EF73	5/- 5 a £1
1K4	5/-	5 a £1	3V4	15/-		6CW4	25/-		6SN7GT	10/-		12H6	3/6	7 a £1	956	5/-	5 a £1	EF86	26/-
1K5	5/-	5 a £1	5R4GY	20/-		6CW4 socket		5/-	6SQ7GT	22/-		12J5	5/-	5 a £1	958A	2/6	10 a £1	EL41	10/-
1K7	5/-	5 a £1	5U4GB	14/6		6F8	5/-	5 a £1	6SS7	7/6	3 a £1	12SA7GT	10/-		1616	20/-		EY91	5/- 5 a £1
1L4	5/-	5 a £1	5V4G	17/6		6G6G	7/6	3 a £1	6U7	7/6	3 a £1	12SC7	5/-	5 a £1	1625	5/-	5 a £1	QQE03/12	47/6
1L5	10/-		5Y3GT	13/9		6G8G	26/-		6U8	17/-		12SK7	5/-	5 a £1	1626	5/-	5 a £1	QQE04/20	£3½
1LN5	(CV781)		6A6	7/6	3 a £1	6H6 Metal		3/6	6V4	11/4		12SQ7	5/-	5 a £1	1629	5/-	5 a £1	QQV06/40	97/6
	5/-	5 a £1	6AB7	10/-		6J5GT	10/-		6V6GT	16/-		12SR7	5/-	5 a £1	2051	5/-	5 a £1	QV04/7	25/-
1M5	5/-	5 a £1	6AC7	7/6	3 a £1	6J6	10/-		6X4	10/-		19	5/-	5 a £1	5763	28/-		RL18	7/6 3 a £1
1P5	5/-	5 a £1	6AG5	5/-	5 a £1	6K7	5/-	5 a £1	6X5	13/-		30	5/-	5 a £1	6021	10/-		UL41	7/6 3 a £1
1Q5	5/-	5 a £1	6AG7	12/6		6K8GT	12/6		7A8	2/-	11 a £1	47	5/-	5 a £1	9002	10/-		VR53	5/- 5 a £1
1R5	16/-		6AJ5	7/6	3 a £1	6L7	5/-	5 a £1	7C5	5/-	5 a £1	57	5/-	5 a £1	9004	5/-	5 a £1	VR102	5/- 5 a £1
1S2	18/-		6AK5	15/-		6N7	5/-	5 a £1	7C7	5/-	5 a £1	58	5/-	5 a £1	AV11	2/11	8 a £1	VR103	5/- 5 a £1
1S5	16/-		6AL5	14/-		6R7	7/6	3 a £1	7E6	3/6	7 a £1	717A	7/6	3 a £1	EA50	2/-	11 a £1	VR136	2/- 12 a £1
1T4	10/-		6AM5	15/-		6SC7	7/6	3 a £1	7W7	2/6	10 a £1	725A	20/-		ECC35	20/-		VR137	2/6 10 a £1
2A5	7/6	3 a £1	6AM6 (EF91)		10/-				12A6	3/-	7 a £1				ECH33	20/-		VT78 (6D6)	5/-
2C42	15/-		6AS7GT	20/-											ECH35	7/6		VT127	5/- 5 a £1
			6B6	7/6	3 a £1													VT501	7/6 3 a £1

Packing and Postage 5d. per Valve.

AMERICAN CO-AX PLUGS AND SOCKETS

Screw on types.

Plugs **10/-**, Sockets **8/9**, Adaptors **17/6.**

MIDGET VARIABLE CONDENSERS

Type T296, 10 pF., with shaft, **15/6.**

HI-FIRE ELECTRONIC TRANSISTOR IGNITION SYSTEM

Fits all makes of cars, trucks, boats, etc. Only three wires to connect, 2 bolts to fit. Instant starts. Smoother running. More m.p.g. Increased acceleration. Complete with wire, bolts and fitting instructions for 6 or 12 volt negative or positive earth.

Negative Earth, £29/5/0 (inc. tax)
Positive Earth, £30/18/6 (inc. tax)

MODEL SE-550 HIGH SENSITIVITY MULTITESTER

100,000 ohms/volt d.c., 12,500 ohms/volt a.c.

Ranges: D.c. volts: 0-0.5, 2.5, 10, 50, 250, 500, 1000. A.c. volts: 0-2.5, 10, 50, 250, 1,000. D.c. current: 0-10 uA., 2.5 mA., 250 mA. and 10 amp. Resistance: 1000R, 100R, 10R, 1R; (centre) 160K, 16K, 1.6K, 160 ohms (max.), 20M, 2M, 200K, 20K ohms. Decibels: —20 db. to plus 62 db. (0 db. equals 0.775 volt). Dimensions 6 x 4 x 2½ in.

Price £13/17/6 (inc. tax)

CENTRAL MODEL CT-330 MULTITESTER

20,000 ohms/volt d.c., 10,000 ohms/volt a.c.

Ranges: D.c. volts: 0-.06, 6, 30, 120, 600, 1,200, 3,000, 6,000 (20K ohms/volt). A.c. volts: 0-6, 30, 120, 600, 1,200 (10K ohms/volt). D.c. current: 0-0.06, 6, 60, 600 mA. Resistance: 0-6K, 600K, 6M, 60M. Decibels: —20 to plus 36 db.

Price £8/10/0 (inc. tax)

SILVER MICA CONDENSERS

Sizes available: 40, 60, 70, 100, 250, 400, 500, 800, 880, 1140, 1680, 1800, 1900, 2000, 2300, 2800, 3900, 5000, 5680, 5780, 5900 pF.

Price: 1/6 each Packing and Postage 5d.

MATRIX BOARD

4¾" x 3" (291)	**3/3**	6" x 4½" (292B)	**5/9**
6" x 1½" (—)	**3/-**	6" x 6" (297)	**7/6**
6" x 2½" (270)	**3/6**	9" x 4½" (293)	**8/6**
6" x 3" (296)	**4/-**	9" x 6" (298)	**11/6**

NEW TRANSISTORS IN STOCK

OC45	**14/-**	OC170	**17/6**
OC71	**10/-**	OC171	**17/6**
OC74	**11/-**	OC45	**14/-**

Packing and Postage 1/-

VERNIER DIALS

Ratio 8 to 1 reduction, scaled 0-10.
Type T501, 1½" diam. .... **17/6** inc. tax
Type T502, 2" diam. .... **22/-** „ „
Type T503, 3" diam. .... **28/-** „ „

Packing and Postage 11d.

COPPER WINDING WIRE

4 oz. Reels

16 B & S Enamel	9/6	26 B & S Enamel	9/6
18 B & S Enamel	8/6	28 B & S Enamel	12/6
20 B & S Enamel	9/6	30 B & S Enamel	13/6
22 B & S Enamel	10/-	33 B & S Enamel	15/6
24 B & S Enamel	10/6	39 B & S Enamel	27/-

RESIN-CORE SOLDER

16 GAUGE

Five-Core in 1-lb. Packets:

40/60 .... **18/-** 60/40 .... **22/-**

or in 7-lb. Reels:

40/60 .... **£6/2/6** 60/40 .... **£7/12/6**

also per Yard:

40/60 .... **8d.** 60/40 .... **9d.**

SAKURA CIRCUIT TESTER

Model TR65

Sensitivity: d.c. 20,000 ohms/volt, a.c. 10,000 ohms/volt. Ranges, d.c. volts: 6, 30, 120, 600, 1,200; a.c. volts: 6, 30, 120, 600, 1,200. D.c. current, 60 μA., 6 mA., 60 mA., 600 mA. Resistance: 10K, 100K, 1M, 10M ohms. Capacitance 0.001-0.2 μF., 0.0001-0.01 μF. Inductance: 30-3,000H. Decibels: minus 20 to plus 17 db. (0 db.—0.775v.—600 ohms). Dimensions: 4⅛ x 6¼ x 2⅜ in. Weight 1.3 lbs.

Price £9/5/-

LOG BOOKS 6/6 each, postage 1/-

TECH MULTIMETER

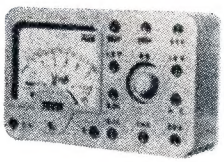

300 μA. movement.
AC and DC voltages: 0-10, 0-50, 0-250, 0-500, 0-1000v.
Current ranges (mA.) 0-1, 0-100, 0-500 mA.
Ohms range: 0-100,000 ohms.
Size: 3¾ x 2½ x 1¼ inches.
Complete with leads.

Price only £3, post paid.

CO-AXIAL CABLE

50 ohm, UR67, 3/8" diam., in 25 yd. Rolls **25/-**; or 1/6 yard.
72 ohm UR70, 3/16" diam., in 27 yd. Rolls **30/-**; or 1/6 yard.
72 ohm, 3/16", 35 feet **10/-**.

Packing and Postage 7/6

SILICON RECTIFIERS

OA210/1N1763 500 p.i.v. 400 mA. **7/6**
OA211/AR800 800 p.i.v. 500 mA. **19/6**

Packing and Postage 1/-

CRYSTAL DIODES

1N21 Mixer U.H.F. Freq. 3060 .... **7/6**
1N23A Mixer U.H.F. 9375 Mc. **7/6**
or **3 for £1.** Packing and Postage 1/-

GERMANIUM DIODES

OA79, OA81, OA91, 1N34A .... **4/6 each**

Packing and Postage 1/-

SLUG-TUNED FORMERS

3/16 inch diameter .... **1/6 each**

SPEAKER TRANSFORMERS

E Type, 5,000 ohms to 3.5 ohms **18/6**
E Type, 7,000 ohms to 3.5 ohms **18/6**

122 AERIAL SETS

24 ft. high. Eight 3-ft. rods, ¾-in. diam., guy ropes and pegs, etc. **£3**, for rail.

832A P.T.F.E. Sockets .... **20/- each**

HAM RADIO SUPPLIERS

5A MELVILLE STREET, HAWTHORN, VICTORIA Phone 86-6465

North Balwyn tram passes corner. **Money Orders and Postal Notes payable North Hawthorn P.O.**

We sell and recommend Leader Test Equipment, Pioneer Stereo Equipment and Speakers, Hitachi Radio Valves and Transistor Radios, Kew Brand Meters, A. & R. Transformers and Transistor Power Supplies, Ducon Condensers, Welwyn Resistors, etc.

"AMATEUR RADIO"

JOURNAL OF THE WIRELESS INSTITUTE OF AUSTRALIA. FOUNDED 1910.

FEBRUARY 1965
Vol. 33, No. 2

Editor:
K. M. COCKING VK3ZFQ

Publications Committee:
G. W. Baty (Secretary) VK3AOM
A. W. Chandler (Circulation) VK3LC
S. T. Clark VK3ASC
E. C. Manifold VK3EM
K. E. Pincott VK3AFJ
W. E. J. Roper VK3ARZ

Advertising Enquiries:
C/o. P.O. Box 36, East Melbourne, C.2, Vic.
or
Mrs. BELLAIRS, Phone 41-3535. 478 Victoria Parade, East Melbourne, C.2, Victoria. Hours 10 a.m. to 3 p.m. only.

Publishers:
VICTORIAN DIVISION W.I.A.,
Reg. Office: 65a Franklin St., Melbourne, Vic.

Printers:
"RICHMOND CHRONICLE," Phone 42-2419. Shakespeare St., Richmond, E.1, Vic.

★

All matters pertaining to "A.R.," other than subscriptions, should be addressed to:

THE EDITOR,
"AMATEUR RADIO,"
P.O. BOX 36,
EAST MELBOURNE, C.2, VIC.

Acknowledgments will be sent following the Committee meeting on the second Monday of each month. All Sub-Editors should forward their articles to reach "A.R." before the 8th of each month. Any item received after the Committee meeting will be held over until the next month. Publication of any item is dependent upon space availability, but in general about two months may elapse before a technical article is published after consideration by the Publications Committee.

★

Members of the W.I.A. should refer all enquiries regarding delivery of "A.R." direct to their Divisional Secretary and not to "A.R." direct. Non members of the W.I.A. should write to the Victorian Division, C/o. P.O. Box 36, East Melbourne. Two months' notice is required before a change of mailing address can be effected. Readers should note that any change in the address of their transmitting station must, by P.M.G. regulation, be notified to the P.M.G. in the State of residence, in addition "A.R." should also be notified. A convenient form is provided in the "Call Book".

★

Direct subscription rate is 30/- a year, post paid, in advance. Issued monthly on the first of the month, January edition excepted.

★

OUR COVER

Notes contributor, Warwick Parsons, VK5PS. See story on page 22.

FEDERAL COMMENT

★

V.H.F./U.H.F. GEAR

Over the last few years, groups of enthusiastic Amateurs have been breaking new ground in the v.h.f. and particularly u.h.f. frequencies in Australia. New distance records have been set on the 288, 576, 1215 and 3300 Mc. bands, but it is almost certain that these achievements have passed unnoticed by all but those few who have been involved. Although v.h.f. and u.h.f. records are periodically published in this journal, few Amateurs would have paid much attention to them.

A quick survey of technical articles by Australian Amateurs in this journal in the last three years has revealed that only two full length articles and one short one have been published dealing with equipment in the u.h.f. frequencies. This appears to represent a lack of interest by those concerned in u.h.f. experimental work, in recording their exploits and thus stimulating interest by others in their work.

The nature of equipment in these frequencies is such that, by present standards it must be home-built and tried, and involves considerable ingenuity in its construction. Surely the publication of articles on the gear used in these records would be of widespread interest and at the same time would record, for posterity, the equipment used.

FIELD DAY CONTEST

This month once again introduces the John Moyle Memorial National Field Day Contest on the 6th and 7th. Whilst this Contest has not always in the past enjoyed the popularity it rightfully deserves, there are always many of the same old entrants in the field, each vieing with the other for personal honors. Of more recent years, the rules have been extended to include multi-operator stations and mobile stations.

These changes to the rules has encouraged several club stations and other stations to participate, but there is still room for many more portables "to get out and go". In this age of transistors and more compact but still efficient aerial systems, one would image there would be greater interest in this annual event to perpetuate the name of a great "mobiler" himself—the late John Moyle.

The popularity of this Contest can really only be measured in the number of stations who go portable or mobile and not by the number of fixed or home stations who may provide contacts when there are insufficient field stations to make the event worthwhile. You can promote the Contest these days without an expensive rig as the power limit is 25 watts. Maybe you won't work much DX these days with that power, but on 80 or 40 metres you will get more than your share of participating stations if you can spare the time to get away from the shack for the week-end. What about a try, fellows?

FEDERAL EXECUTIVE, W.I.A.

CONTENTS

Further Modifications to the 522 for F.m. Operation 3
No-Space Aerial System for Six Bands 4
Semiconductor Power Supply for Transceivers 6
Lasers—Part 2 7
The Historical Development of Radio Communication—Part 2 9
An I.F. Spotter 13
H.f. Band Transmitter 15
Transmitter for 70 Centimetres .. 23
B.E.R.U. Contest 5
A.R.R.L. DX Contest 13
VK0 Call Signs 14
Details of U.S.A. Counties 14
Higginbotham Award 22
New Time Signal Service 24
New Call Signs 24

are you one of the 8,500 who read Mullard Outlook?

SUBSCRIPTION FORM

To: MULLARD-AUSTRALIA PTY. LTD.
35 Clarence St., Sydney, N.S.W., Australia

USE BLOCK LETTERS

Enclosed is my remittance of 12/- as subscription for the 1965 issues of Outlook (six copies per annum).

Name .....

Address .....

.....

..... State .....

Cheques, postal notes and money orders to be made payable to Mullard-Australia Pty. Ltd.

M143C

Mullard

MULLARD-AUSTRALIA PTY. LTD. ● 35-43 CLARENCE STREET, SYDNEY, N.S.W., 29 2006.
123 VICTORIA PARADE, COLLINGWOOD, N.5, VIC., 41 6644
Associated with MULLARD LIMITED, LONDON

Mullard

M143C

Further Modifications to the 522 for F.M. Operation

E. C. MANIFOLD, VK3EM*

WHEN the 522 was modified and first installed there were no other channels in use except channel A, and therefore no means of checking interchannel interference under working conditions.

A suggestion that interference may be experienced was given when the unit was checked with a signal generator, as there appeared to be a spurious response at one position.

RECEIVER

However, time has proved that the use of two crystal oscillators in the receiver for each mixer has given serious interference with interchannel A, B and C operation, mainly due to the selected second mixer crystal frequency of 7320 kc.

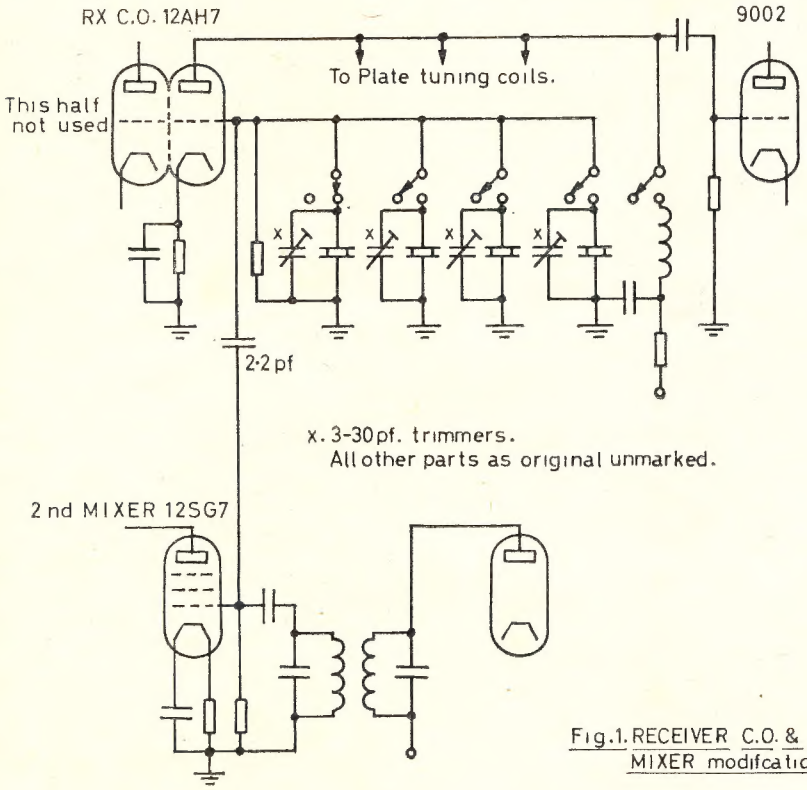

Fig. 1. RECEIVER C.O. & MIXER modifcation.

To eliminate the problem, the 7320 kc. crystal has been removed and the 7450 kc. crystal has been used for both mixer injections, v.h.f. and h.f., for channel A, and the i.f. frequencies changed to suit this arrangement.

This was mentioned in the original article as a possible method of achieving mixing for both conversions from the one crystal, and has proved to be necessary.

The receiver crystals now in use are: Channel A, as originally, 7450 kc.; channel B, now 7458.11 kc.; channel C, 7466.33 kc., and, although not yet in use or tried, channel D, 7475.33 kc. Each crystal is paralleled with a 3-30 pF. trimmer to allow adjustment to correct net frequency.

The first i.f. is slightly changed to 11.754 kc. and the second i.f. channel is now 4.3 Mc., which can easily be covered by the tuning slug adjustment in the i.f. coils.

Initial alignment should be done as suggested in the original article (Oct. and Nov. 1963 "A.R.") on channel A and after the i.f. alignment has been made with the ratio detector adjusted to centre frequency, change to channel B, C and D in turn and adjust each crystal trimmer to give a centre zero reading on the ratio detector when netted on the net frequency **to a standard transmission.**

Modify the original circuit to show a 3-30 pF. trimmer across each receiver crystal and second mixer injection as shown in the circuit of Fig. 1.

It is suggested that adjustment of oscillator injection should be experimented with, to give a limiter current of 60 to 80 μA. on noise alone.

It is possible to provide injection voltages at each mixer to give quite high limiter grid current. This is misleading, as it appears that the receiver is at a more sensitive condition. In actual fact, the receiver may not unmute except on very strong signals, which will mean that the weaker signals will be missed.

The explanation for this is not simple or straightforward. Broadly speaking, the muting amplifier amplifies an audio component present in the plate circuit of the limiter, and if too much oscillator voltage is injected at each mixer it appears that on marginal signals a fairly high mixer noise is generated, which is amplified by the i.f. strip to the limiter, and further amplified by the muting amplifier to produce greater rectified d.c. voltages as muting bias to the audio amplifier, which will bias the audio tube well past cut-off.

The indications seen on the limiter grid meter will be a rise in limiter grid current for a received signal, but the set will not unmute until the signal reaches a fairly strong value.

Incidentally, if you want to listen to an a.m. signal with the f.m. receiver, an audio voltage can be picked off the limiter grid and fed to the audio amplifier, as the limiter is, among other things, a grid leak detector.

TRANSMITTER

Again as mentioned, only single channel operation was in use at the time of the 522 modification, and adjustment to the crystal oscillator frequency by addition of parallel crystal capacitance proved to be difficult with the circuit shown, as adding C across the crystal only succeeded in reducing the feedback voltage across the grid cathode circuit, with the resultant unstable crystal operation, and increasing the C beyond 10 pF. put the circuit out of oscillation.

(Continued on Page 23)

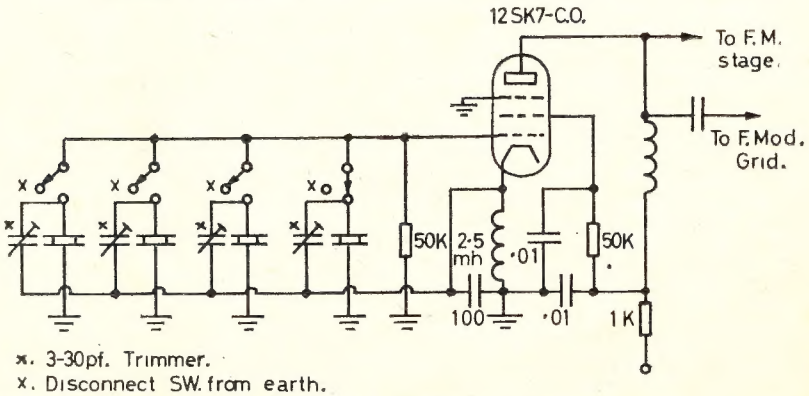

x. 3-30pf. Trimmer.
x. Disconnect SW. from earth.

Fig. 2. TRANSMITTER C.O. Modified for multi-channel operation.

* 267 Jasper Rd., McKinnon, S.E.14, Vic.

NO-SPACE AERIAL SYSTEM FOR SIX BANDS*

GETTING THE MOST FROM THE MINIMUM SITE AREA

L. H. THOMAS, M.B.E. (G6QB)

WHERE aerial systems are concerned nearly all Amateurs work under difficulties—that is to say that they are seldom in a position to put up the aerial that is theoretically best suited to their requirements, or even anything remotely resembling it.

The main reason why we, as Amateurs, are achieving results which no commercial communications system designer would look upon as possible, is that we have the gift, or the knack, of improvisation, forced upon us by circumstances. And the chief of these is lack of space.

The few fortunate owners of "aerial farm" facilities can choose and decide upon direction, length and height, and put up exactly what they want for each band. But for every one of these exceptional cases, there are a thousand Amateurs who say "I only work Twenty, because my garden is only 35 feet long," or "No good trying Top Band, because I can't get out with a 67-foot wire" . . . and so on.

It is chiefly the man who would like to work all bands who suffers from lack of space; if you are content with good DX on Twenty, you can probably put up a small beam and call it a day. Or if Forty is your favourite, a ground-plane or loaded vertical will see you through. But to work all bands, Ten to One-Sixty, with reasonable efficiency, you need either a lot of space or plenty of patience, time and ingenuity. And even then you mustn't expect to beat the top DX'ers at their own game!

NO SPACE AT ALL!

To show what can be done by almost any Amateur transmitter, without heavy expense or even any purchase of commercial gear, it was decided to start from the premise that no space at all was available in the way of a garden. The house or bungalow itself would have to form the boundaries of the aerial system, with no masts or erections of any kind permitted in the backyard, or whatever space might in reality be available. This was taken to be about the most difficult case with a definite object in view (although it is realised that some people in flats or terraced houses could be even worse off).

The basis of the aerial system was a mast of the usual t.v. variety, fixed (by the local t.v. dealer) to the chimney-stack at the centre of a smallish bungalow. A 20-ft. length of dural was used, but allowed to overlap the chimney by four feet or more, to give a really firm support. A continuous halyard of tough nylon line (435 lb. breaking-strain!) was run through an insulator which was securely fixed to the top of the mast instead of a pulley.

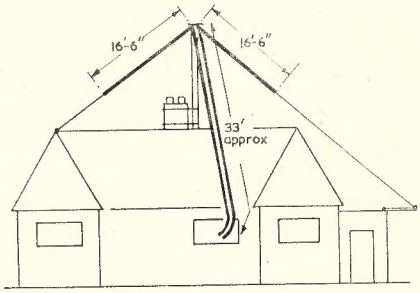

Fig. 1.—General layout arrangement of the inverted-Vee system discussed by G6QB in his article. In suitable locations, the arm-lengths could be doubled and a higher roof-mast used. The feeder-terminating configurations for six-band working are shown in Fig. 2.

Since the band of greatest interest was to be Twenty, a dipole for that band was chosen, and in view of the fact that sloping dipoles (mis-named "Inverted Vees," which are something quite different) are so efficient, this type was decided upon. Indeed, it was mandatory, since one cannot put up a horizontal dipole without **two** supports!

It was found that the two legs, cut to 16 ft. 6 in. each, sloped down at about 40° from the horizontal when they were pulled out to the extremities of the building (again using nylon cord for the purpose). With some shapes and sizes of building the angle of droop will be steeper, but this does not appear to be critical, and since tuned feeders are used, any deviation of the centre impedance from 72 ohms is of no consequence.

A length of open-wire line was made up, and fortuitiously turned out to be roughly 33 feet from dipole centre to lead-in insulators, allowing for a slight pull-out to avoid guttering and so on. The feeders were made of ordinary plasti-covered lighting flex, 33 feet of the "flat twin" variety being pulled apart into two single wires. Polythene curtain-rail was the material chosen for the spreaders. The curtain rail, in this instance, was cut into three-inch lengths and drilled to give a slight clearance for the flex. One spacer every eighteen inches was used, and each one was sealed to the plastic insulation of the wire by a dab with the soldering iron.

SUPPORTING THE AERIAL

The centre should obviously be hauled up to the very highest possible point, with both legs and the open-wire feeder drooping down the roof. Even this simple arrangement gives scope for some vicious tangles and catchings-up on obstructions, under tiles and at the eaves—but keep a clear head and you will end up with the feeder coming down centrally, and the two legs of the dipole, extended to any convenient length with nylon or polythene cord, dropping on either side. From this point everything depends upon the shape and size of the house or bungalow.

In this particular case it was a long-ish shape, with garage at one end, and the anchorage points for the cords were pretty obvious. At one end a slight extension was made by means of a horizontal pole attached to the garage roof, and a similar dodge could have been used at the other end had it been necessary. Small egg insulators were used between the dipole ends and the nylon cord, but the insulation of the latter is so good that they are hardly necessary. The general configuration is shown in Fig. 1.

Erection completed, and the feeder connected to two lead-in insulators, all that remained was to make sure that the thing worked! There was obviously going to be no doubt about this on Twenty, so that band was taken first, and then the scheme for each of the other bands tried out.

SIX-BAND SUITABILITY

The configurations are shown in Fig. 2, from which it will be seen that the aerial is used as a loaded vertical on One-Sixty and Eighty; as a tuned vertical on Forty; as a straight doublet on Twenty; and simply as a centre-fed wire tuned to resonance on Fifteen and Ten. On Ten, actually, it can be regarded as two dipoles in phase, whereas on Fifteen it is a kind of elongated dipole, part of the feed-line having been separated out, so to speak, and allowed to radiate along with the aerial.

On Twenty, if the feeder is roughly 33 feet long, it will give a good match into 72 ohm line and no a.t.u. will be necessary. This is because the half-wave of feeder will show the same impedance at the bottom end as it is confronted with at the top, and will therefore be very near 72 ohms. If the 33 ft. line is not practicable, no matter—use the a.t.u. to produce a match into whatever impedance the bottom of the feeder looks like.

If a choice of direction is possible (after all, most houses have four corners!) a little thought about this will be worth while. The natural run for the actual aerial described was roughly NE-SW, which meant that it was extremely good for the U.S.A. (check up on your DX Zone Map!), but very poor for New Zealand and South America. Unfortunately, being good for the U.S.A. meant that it was also good (much too good) for South-East Europe, whence so many strange noises originate. Eventually, by means of some juggling, a run was fixed upon which was almost East-West . . . but you will have to make your own individual decision according to local circumstances.

Excellent reports were received with 150 watts into this aerial on Twenty—comparable with, or even better than, those from a long-wire which had previously been in use. Countries worked included KH6, KL7, ZL, JA, W, VE,

* Reprinted from "The Short Wave Magazine," April, 1964.

ZS, CE, VP8, FB8, VS9, VU, VS1 and many others.

And so to Forty! On this band the aerial is a vertical quarter-wave which has been made somewhat too long by the arms of the dipole—the feeder alone would make the quarter-wave. By means of the usual type of a.t.u. a good match was obtained, and it was very heartening to note that it **did** exhibit the characteristics expected from a ground-plane. European stations were one or two S-points lower compared with the long-wire (which had been left up for comparisons, but was later taken down), and this led to the belief that the efficiency was not going to be high. However, after darkness had come, the heartening discovery was made that W and VE stations were two S-points **better** on the vertical than on the long wire! Switching over quickly from one to the other, using two a.t.u's, confirmed that the ratio of DX to European QRM was very much better on the vertical.

A really good earth connection is obviously a necessity here, and since the "no-space" claim had been made, it was felt that the use of radials or a counterpoise would be cheating. So the mains earth was carefully bonded to three different water-pipes within the house, and a long earth-spike (six feet of it) was knocked in the ground just outside the window. Results spoke for themselves, reception being excellent, and transmission on 40 metres (with 150 watts of c.w.) fetched in 579 and 589 reports from W1, 2, 3 and 8 as early as 2130 G.M.T.

THE L.F. BANDS

There has been little compromise so far; on Twenty, fed as a doublet, the aerial did what was expected, and on Forty, with the feeders strapped, it definitely exceeded expectations. So to Eighty, with some trepidation, where the feeders remained strapped, but the aerial was a pretty short vertical for the band. Serious loading was used, as in Fig. 2(a), and the normal run of s.s.b. and c.w. contacts around Europe were made. The pleasant surprise came when 5A3CJ appeared on 3785 kc. s.s.b., quite early one evening (around 1900) and was at least one S-point better on this small vertical than on the long wire. At the time of testing, Eighty was going through a bad patch for DX, and the early morning ZLs had gone, so, regrettably, it was not possible to test the aerial on them. But on reception it seemed excellent on any stray DX that did come up; and on the transmitting side good reports were received from all the normal run of 80-metre contacts. After all, some of the keen DX types achieve outstanding results with 60-foot verticals on this band, and the total length of this one, from the bottom of the strapped feeders to the dipole tips, is 50 feet or thereabouts, so it is not too much of a compromise.

On One-Sixty, though, it really **is**! It is definitely not the aerial for attempting DX on Top Band. But for local and semi-local work, and even for occasional GDX, it is more than adequate. After all, it is a pretty good aerial compared with some of the mobile whips that achieve excellent GDX results. The same series-tuned loading coil was used both for Eighty

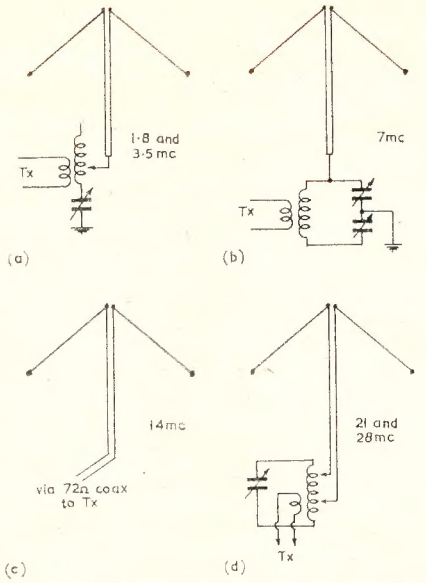

Fig. 2.—In (a) it is shown that by strapping the feeders and series-tuning the whole system against ground, operation on both l.f. bands can be obtained. The other sketches show the transmitter-end arrangements for working the h.f. bands. The only requirement at the station end is a versatile a.t.u.

and Top Band; it was the same size as a normal Top-Band tank coil, and provided with numerous taps. The best combination of coil size and tuning condenser setting was found simply by playing with both until the maximum aerial current was obtained at the lead-in point, where the feeders were strapped together.

The best contacts on One-Sixty were with DL, OK and HB9, all with pretty weak reports—but at least the ten watts did get there. Those who fight shy of the 160-metre band because they think they can't put up a good enough aerial might at least try this arrangement, and would probably be surprised.

TEN AND FIFTEEN

It has been difficult to assess results on these bands, which have not often been open at the times available for testing. But the performance on Fifteen seems at least equal to that on Twenty. An a.t.u. is necessary, of course, and it can be either of the kind shown for Forty (Fig. 2b) or just a simple tuned coil with tappings (Fig. 2d). You **can**, of course, strap the feeders and try it as a vertical on these h.f. bands, but the t.v.i. situation is likely to be worsened if this is done. As a "long dipole" on Fifteen, and two dipoles in phase on Ten, no t.v.i. was encountered and the reception characteristics were extremely good.

On Fifteen, in fact, some amazing reports were received from Ws on one of the rare days when the band was wide open. C.w. produced several 599 reports, and s.s.b. brought in some 8s and 9s and even a 9-plus or two; the direction of the aerial was favourable for U.S.A. at this time.

Contacts on Ten were confined to locals and the odd European when conditions permitted, but it is pretty obvious that the aerial would perform excellently in the preferred directions when that band is once more open for consistent DX.

SUMMARY

There may even be reasons why people who have plenty of space might like to try this simple aerial system, which is so compact that it can often be installed without interfering with any other wire or beams that may already be up.

Its advantages are: Simplicity of erection (one pole only); no need for space apart from the actual house plot; versatility (six bands); and certainty of excellent results now on at least three bands (Fifteen, Twenty and Forty).

Among the disadvantages should, in fairness, be mentioned the need for a really good earth system for the bands on which it is used as a vertical; also the fact that there will still be some readers who cannot make use of their roof or chimney-stack in this way owing to the prior claim of t.v. aerials; and its possible unsuitability for terraced houses, flats or council houses in which roof masts are not allowed.

However, it may possibly prove helpful to quite a number of short-garden owners to whom it has not previously occurred that one good high mast can be put to just as great a variety of uses as a variety of small ones, fences, trees and so on.

Try other lengths of radiator, by all means, if you have the space available; two sloping lengths of 33 feet each, if they can be accommodated, will give you two dipoles in phase on Twenty, and a rough equivalent of a vertical half-wave on Forty. They would probably be more interesting on Eighty and Top-Band, too. But the basic idea of starting with a Twenty-metre doublet is simple and effective. ●

☆

B.E.R.U. CONTEST

Radio Amateurs throughout the British Commonwealth are invited to take part in the 28th B.E.R.U. Contest to be held on February 20-21, 1965.

Sections: The Contest is divided into two sections: (a) High power—maximum licensed power; (b) Low power—maximum input 25w.

Duration: The Contest (both sections) will start at 0001 G.M.T. on Saturday, February 20, and end at 2359 G.M.T. on Sunday, February 21, 1965.

Entries: Entries must be postmarked not later than March 15, 1965, and must be addressed to the Contests Committee, Radio Society of Great Britain, 28 Little Russell St., London, W.C.1, England.

Bands: Operation is restricted to the following bands: 3.5, 7, 14, 21, and 28 Mc. Transmission must be of type A1 (pure c.w.) only, and frequent tone reports of T8 or less may result in disqualification.

Contacts: Contacts may be made with any station using a British Commonwealth call sign except within the entrant's own call area. Only one contact on each band with a specific station will count for points.

Scoring: Each completed contact will score **five points**. In addition a bonus of 20 may be claimed for the first contact with each new Commonwealth call area on each band. All British Isles Stations (G, GB, GC, GD, GI, GM and GW) count as only one call area.

The contest number of six figures shall be made up of the RST report and three figures starting with 001 for the first contact and increasing by one for each successive contact, e.g. 559001 for the first and 439002 for the second contact, and so on.

Logs: These must be set out as follows: Date, Time (G.M.T.), Call sign of station worked, No. Sent, No. Received, Band (Mc.), Bonus Points, Points Claimed. Total points equal Points Claimed plus Bonus Points.

S.w.l. Section: There is an s.w.l. section and the rules are as for the transmitting section.

SEMICONDUCTOR POWER SUPPLY FOR TRANSCEIVERS

THE following features apply to this semiconductor power supply:—

1. Uses t.v. type power transformer (e.g. H.M.V. part 9040251/2).
2. Gives voltages of 12v. a.c., +300v., +600v., —150v., and +15v. d.c.
3. Reliability greater than vacuum rectifier supply.
4. Regulation better than vacuum rectifier supply.
5. Uses readily available parts.

This power supply was built to supply a Heathkit HW22 transceiver and would be suitable for a Swan transceiver.

OA210s, or their equivalent, are available cheaply and, if space is not important, disposals condensers (100 μF. 150v. wkg. 200v. peak) may be used. These should be in series where indicated to cover the voltage rating. A resistor (50K) across each electrolytic would be necessary for the series arrangement to equalise the voltages. Capacitor values are not critical and smaller sizes may be satisfactory.

It will be seen from the circuit that voltage doubling and quadrupling is used.

The transformer used was rated at 120 watts (continuous) on the high voltage side and 60 watts on the 12v. winding. However, a sideband transceiver would require a transformer with about half these ratings.

—M. E. COLLETT, VK2RU.

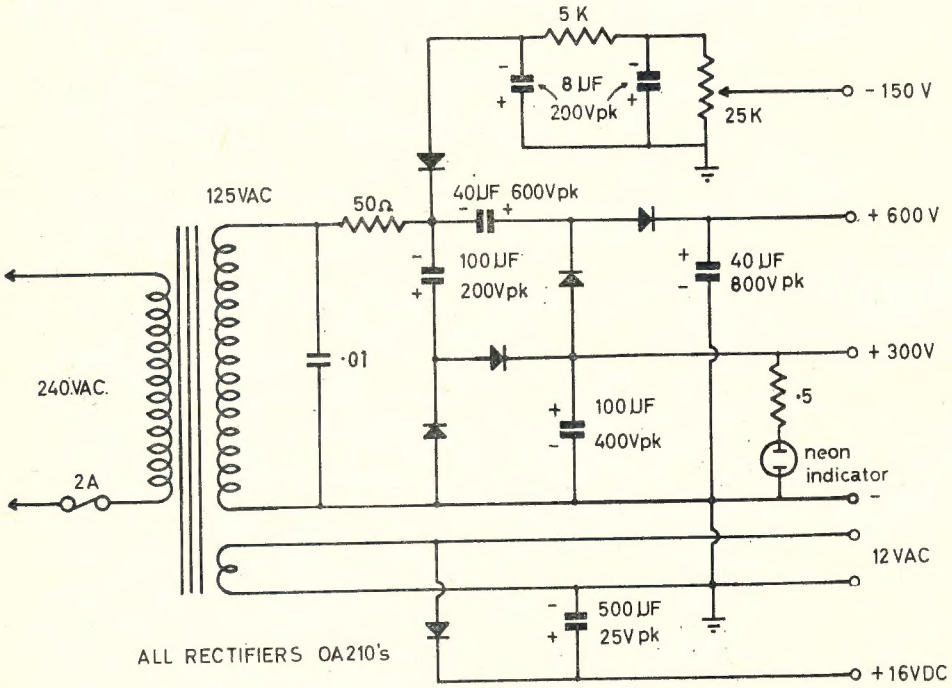

Fig. 1.—Semiconductor Power Supply.

CHOOSE THE BEST—IT COSTS NO MORE

RESIN CORE SOLDERS
for reliable connections

O. T. LEMPRIERE & CO. LIMITED. Head Office: 27-41 Bowden Street, Alexandria, N.S.W.
and at Melbourne • Brisbane • Adelaide • Perth

AMENDMENT TO NATIONAL FIELD DAY CONTEST RULES

Readers are asked to note the following alteration to the Rules of the John Moyle Memorial National Field Day Contest, 1965.

Delete Rule 8 as published in Dec. 1964 "A.R.," and substitute:—

"3. The following shall constitute Call Areas: VK1, VK2, VK3, VK4, VK5, VK6, VK7, VK8, VK9, and VK0."

AMATEUR FREQUENCIES:

USE THEM OR LOSE THEM!

LOW DRIFT CRYSTALS

FOR

AMATEUR BANDS

ACCURACY 0.01% OF STATED FREQUENCY

3.5 and 7 Mc.
Unmounted, £2/10/0
Mounted, £3/0/0

12.5 and 14 Mc.
Fundamental Crystals, "Low Drift,"
Mounted only, £5.

THESE PRICES DO NOT INCLUDE SALES TAX.

Spot Frequency Crystals Prices on Application.

Regrinds £1/10/0

MAXWELL HOWDEN

15 CLAREMONT CRES., CANTERBURY, E.7, VICTORIA

LASERS*

BY STANLEY LEINWOLL†

Part 2—The Conclusion of Lasers; the Amateur's Role in this New Challenge.

THE laser is potentially one of the most revolutionary inventions in many decades. Its possible impact on Amateur Radio is far-reaching. Last month we presented a brief history leading up to the invention of the first laser. Since that historic occasion, significant progress has been made toward the use of the laser in communications, and several successful experiments using a beam of light to carry both audio and video have already been run. This is the concluding article on the laser and includes a look at the future in terms of the Radio Amateur.

THE GAS LASER

In February of 1961 scientists at Bell Laboratories announced the first achievement of continuous operation of the gaseous optical maser. Although structually much different from the solid state laser, the basic principles are the same.

The device used as an active medium a mixture of gases. The cavity consisted of a quartz tube about 80 centimetres long and 1.5 centimetres in diameter.

The first laser used neon and helium gas in proportions of 90 and 10% respectively, at a pressure of 1 to 2 millimetres of mercury. It produced five coherent infra-red emissions, the strongest at 11530 angstrom units.

At either end of the quartz tube (see Fig. 5) highly reflecting parallel mirrors in metal chambers are used to reflect the stimulated light back into the cavity. Flexible bellows in these chambers would permit external adjustments to the mirrors. At the end of the system were two optically flat windows through which the undistorted laser beam could leave. The entire device was about 1 metre long.

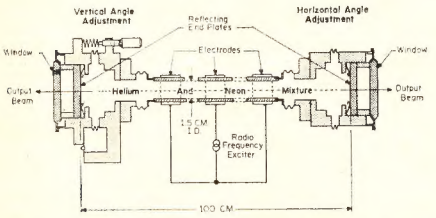

Fig. 5.—Construction of a gaseous optical maser built at Bell Laboratories. The r.f. excitation was at 28 Mc. and the output was in the infra-red region.

R.F. PUMPING SOURCE

A 28 megacycle radio frequency generator fed energy to three electrodes surrounding the tube, creating a discharge inside the tube. Since the output was in the infra-red, an image converter was needed to see the beam.

The best maser beams diverge only about one minute of arc—at a distance of two hundred feet a beam would cover a spot less than one inch in diameter. The spectral linewidth of this emission is but a few billionths of an angstrom, or a few cycles per second, representing a linewidth many times less than that of the solid-state optical masers. Thus it represents the purest "color" ever generated.

Since the development of the first gaseous laser many refinements have broadened both the efficiency of the device, the frequencies produced, and the number of gases which were made to "lase". In addition to the helium-neon laser, devices have been developed which produce optical maser action in all the noble gases, helium, argon, neon, krypton, and xenon. Gas lasers using neon-oxygen and argon-oxygen mixtures have also been developed.

Frequency ranges now extend from the infra-red to the visible part of the spectrum, at a frequency of 6328 angstrom units.

Gas lasers have been extremely useful in performing precise scientific measurements, due to the purity of the signal produced, and the narrowness of the beam.

THE INJECTION LASER

From the communications standpoint, and where the interests of the Amateur are concerned, perhaps the most significant development in the field of lasers occurred in November 1962, when an entirely new concept in the production of coherent radiation was announced by International Business Machines Corp., G.E., and M.I.T. almost simultaneously.

The new device, called an injection laser, employed a semi-conductor diode driven directly by an electric current, rather than by making use of an external energy source, as solid state and gaseous lasers had been doing.

The chief drawback to the use of solid and gaseous lasers for communications was in modulating and demodulating at frequencies in the million megacycle range.

The injection laser is easily modulated simply by varying the input current. Here is how it works:

The injection laser consists of a gallium arsenide semi-conductor diode through which an electric current is passed. When the current flow reaches a certain threshhold level the diode emits coherent light. The diode, shown in Fig. 6, consists of an n-type region which contains an excess of electrons. This region is physically joined to a p-type region which contains a deficiency of electrons. A deficiency of electrons is also referred to as a "hole".

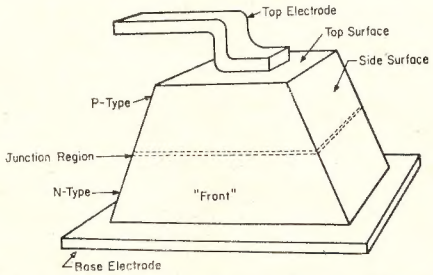

Fig. 6.—Construction of the General Electric Gallium Arsenide diode laser. The front and back surfaces are highly polished and perfectly parallel. The junction region is only about 1/10,000th of an inch thick and coherent light is emitted perpendicular to the front and back surfaces along the junction.

Light is produced in a semiconductor by passing a current through it. Electrons from the n-region move across the junction and are injected into the p-region, where they drop into holes. The electrons which move across the junction possess energy when they are in motion, and once they drop into a hole some of this energy is given up in the form of a photon of light.

Materials have been known for some time that emit light when subject to an electric current. These are called electroluminescent. What was not known, however, was that it was possible to produce coherent light by applying a large enough current.

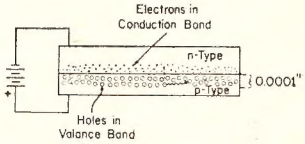

Fig. 7.—Diagram above shows how, on application of forward bias, electrons are injected into the p-region. When an electron drops into a hole, a photon is released.

THE GALLIUM ARSENIDE SEMICONDUCTOR DIODE

Semiconductor diodes are prepared by adding impurities. The Gallium Arsenide injection laser is made by adding impurities in the form of tellurium and zinc, which produce n- and p-type materials. These are joined, producing a single crystal, one side of which contains the n-type material, the other the p-type.

On application of current, electrons move across the junction into holes. The process is called recombination, and results, as we have said, in the emission of a photon. This is shown in Fig. 7. These junctions, incidentally, have other unusual properties, and are the basis of most other semiconductor devices such as transistors and semiconductor rectifiers.

PRODUCTION OF COHERENT LIGHT

If the forward bias that is applied to the semiconductor is great enough, a large number of electrons and holes will concentrate in a very narrow region, about 1/10,000th of an inch wide on the p-side of the junction.

In the active region large numbers of photons are emitted. These, in turn, stimulate the emission of more photons by accelerating the recombination of injected electrons with holes. Each time a photon stimulates the emission of a second photon, the emission occurs in **phase** with the first, and **in the same direction.** It is for this reason that the resultant light is coherent as shown in Fig. 8.

Since the thickness of the active region is so small, emitted radiation

---

* Reprinted from "CQ," September, 1964.

† Radio Frequency and Propagation Manager, Radio Free Europe.

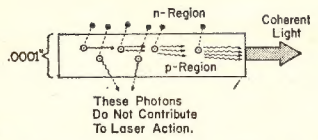

Fig. 8.—Emission of a photon when an electron drops into a hole can stimulate recombination of other electrons and holes. When this occurs, parallel to the plane of the junction, stimulated emission grows in intensity. Chain reaction continues until a pulse of coherent light is emitted.

propagates most strongly in the plane of the junction. Fig. 9 shows the highly directional emission obtainable from an injection laser 0.1 x 0.1 x 1.25 mm. made by the I.B.M. Corporation.

Waves travelling along the long axis remain in the junction region longer than any others. The rear face can be polished, as it is with the ruby laser, to obtain unidirectional action, as shown in the figure.

The side faces of the laser are usually sawed or etched to permit passage of radiation in this direction with a minimum of internal reflection.

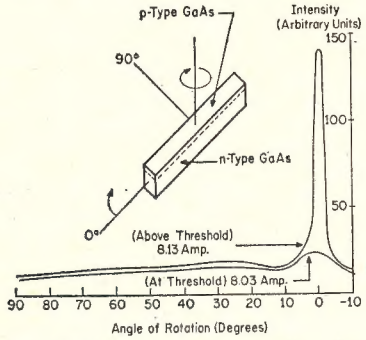

Fig. 9.—Directional light amplification obtained by cleavage. I.B.M. scientists obtained unidirectional radiation by polishing the rear plane.

CURRENT LEVELS

Early injection laser models operated at extremely high current densities, of the order of 10,000 amperes per square centimetre. These models produced their light in pulses and could not operate continuously.

Subsequently c.w. injection lasers were developed to operate at much lower current densities, of the order of 100A/cm^2.

Recently developed injection lasers put out more than 1 watt for 5 watts input. This efficiency, of approximately 20%, compares with about 0.1% efficiency for ruby lasers.

Although injection lasers can be operated at room temperatures, such operation must be of the pulse-type, and even then the pulses must lie spaced in time such that overheating does not occur. Such overheating can easily damage the crystal.

Generally, injection lasers are operated at liquid helium, hydrogen, and nitrogen temperatures, ranging from 271° to 196° below zero Centigrade. These temperatures prevent excessive heating and enable the devices to be operated continuously.

OTHER SEMICONDUCTING MATERIALS

Since the end of 1962 researchers have found other semiconductor materials that will lase. These include indium phosphide, indium arsenide, indium antimonide, and a gallium arsenide-gallium phosphide compound.

Development of additional injection laser materials furthers the potential of these devices by broadening their frequency range and thus their potential for use.

Frequency ranges of current injection lasers extend from 7,000 angstrom units for the gallium arsenide phosphide compound to 52,000 angstrom units for the most recently announced semiconductor laser, indium antimonide.

The frequency ranges produced by injection lasers run from 60 to 430 **million megacycles per second**. These frequency ranges are in the infra-red portion of the electro-magnetic spectrum.

APPLICATIONS

The most significant advances involving injection lasers have come in the field of communications. Laser light is well suited to communications use because it is emitted in nearly parallel beams, allowing maximum transfer of energy. Since it is coherent, its information carrying capacity is far greater than ordinary light sources.

Thus far, pumped lasers, both solid state, such as the ruby, as well as the gas, have not been satisfactory because problems in modulating the light have not been adequately solved. Modulating the light produced by an injection laser is a relatively simple matter, since the intensity of the light output is a function of the current in the laser once the semiconductor has begun to lase; increasing the current increases the light output.

Since the injection laser can respond to driving current changes in a nanosecond (a billionth of a second) injection laser light can transmit up to one billion "bits" or units of information in one second.

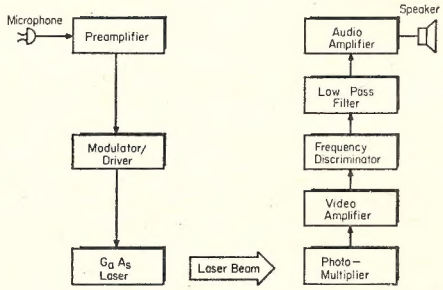

Fig. 10.—Block diagram shows the basic circuit elements used in an injection laser communication experiment demonstrated by International Business Machines Corporation. An audio signal from the microphone is sent to the modulator-driver which, in conjunction with the Ga As laser, transforms the audio signal into a series of laser pulses. The audio information, represented by the frequency of this train of laser pulses, is received by the photo-multiplier tube. The photo-multiplier tube converts the laser pulses to electrical pulses which are amplified, demodulated and used to power a speaker system.

The modulation technique used in the experimental I.B.M. system is called pulse frequency modulation. In this system, the rate at which pulses are emitted from the laser are varied in such a way as to represent voice or other information. The basic elements of the I.B.M. system are shown in Fig. 10. The apparatus consists of two basic components: the laser transmitter and its associated modulation circuitry, and the receiver, which consists of a phototube and demodulation circuitry. The modulation circuit is shown in Fig. 11.

Because it is small, light in weight, and more efficient than optically pumped solid state and gas lasers, the injection laser is ideally suited for a space communications systems, and will be able to fit easily into an earth satellite.

LIMITATIONS

The small size of the injection laser, although advantageous, also presents some drawbacks. The region in which lasing action occurs is very small, since electrons, once they have crossed the junction, tend to drop into holes immediately. Since they do not move more than 0.0001 inch before recombination occurs, the power of the injection laser is limited.

A second limitation is beam width. Although the injection laser produces highly directional beams, they still diverge significantly more than those produced by other lasers, particularly gas. Beam widths of the order of degrees are often produced by injection lasers compared with a fraction of a degree for the gas laser.

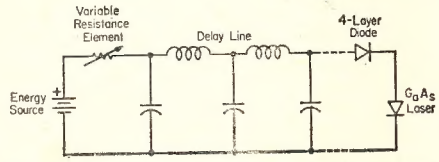

Fig. 11.—Diagram shows the modulation circuit used in injection laser communications experiment demonstrated by International Business Machines Corporation. The modulation technique, called pulse-frequency modulation, controls the rate at which the laser emits pulses, thus permitting audio signals to be transmitter over the beam. Output of the laser is controlled directly by impressing electrical pulses from the delay line through the device. When the delay line charges to a preset voltage, the 4-layer diode breaks down, discharging the delay line through the Ga As laser. The frequency at which these electrical pulses are delivered to the laser is controlled by audio signals through the variable resistance element.

THE FUTURE

It is not certain at this point what direction laser research and development will take. Intensive studies are now underway in this country as well as in Europe, and new announcements are being made almost on a daily basis.

The consensus among most scientists and engineers working in the field is that the invention of the laser is one of the most important technological break-throughs of the century.

For the Radio Amateur the laser could turn out to be the most revolutionary development in the history of the hobby. It has been said that prior to World War II. every important advance in the field of radio communication was the work of Amateurs, with the professional scientists and engineers being able only to refine the pioneering efforts of Amateurs. With the advent of World War II., however, research and development in communications became too expensive and complex for the individual efforts of Amateurs working by themselves.

With the coming of the age of the laser and of space communications, the Amateur is once again in a position to contribute significantly to radio communications research.

(Continued on Page 12)

The Historical Development of Radio Communication

PART THREE—THE EARLY WORK OF MARCONI

J. R. COX,* VK6NJ

CHAPTER 2

3. THE ERA OF FORMULATION

At the World Radio Convention held in Sydney, 1938, Sir Ernest Fisk described Marconi as a pioneer of applied radio and said, "We and the whole world of radio recognise him as the founder of our art and unquestioned leader for more than forty years."[37] This tribute to a remarkable man, who had shared the Nobel Prize in 1909, was both authoritative and erudite. Marconi had accomplished just what Sir Ernest had intimated. To him must go the credit of having founded the art of radio, and of having done so by comprehending, collating and bringing the independent investigations of previous experimenters to fruition in the form of practical wireless.

Born at Bologna, Italy, on 25th April, 1874, Marconi had just attained his majority when he initiated the experiments which had such resounding effects upon the development of wireless communication and mankind in general. Previously he had studied physics under Professor Rosa, of the Leghorn Technical School, and not only gained invaluable knowledge on Hertzian wave research but, from then on quite independently, it seems, to have made up his mind to use it for effecting practical wireless telegraphy. The prelude, as it turned out to be, to speech transmission which at that stage was hardly believed possible, let alone practical.

Development by this time had reached the point where electromagnetic waves could be artificially produced and propagated into space by Hertzian methods. Detection was by use of the coherer. Radiation was omnidirectional, of very low range, while reception lacked sensitivity and selectivity. Innovations implemented by Marconi assisted the lifting of these impediments to full utilisation.

The Hertzian radiator consisted of two balls; across the gap between a spark jumped when the air dielectric broke down. Radiation was directly from these spark balls; in the process, only a minute part of the energy created.[38]

Marconi had not long continued his experiments with the spark-gap oscillator when it occurred to him to increase its transmitting power by connecting large insulated conductors to each side of the spark gap. One spark ball of the induction coil was connected to a metal plate held aloft by a mast and the other to an earth plate. The elevated capacity and the earth now formed an oscillatory circuit and when the receiver was similarly equipped with aerial plate and earth connections the receiver was, indeed, situated on a remote part of the oscillator itself. Under this arrangement the earth was requisitioned as a conductor just as it had been successfully employed as a conductor in one-wire telegraphy since Steinheil's demonstration in 1838.

Marconi's innovation showed that the answer to the question of long distance radiation of Hertzian waves lay, not only in increasing the strength of oscillation, but in improving the efficiency of the oscillator as a propagator of electro-magnetic waves. Popov had used an aerial to receive natural electro-magnetic waves, so that the idea of a receiving antenna was not new, but Marconi's application of an antenna system to an oscillator was decidedly novel. This idea proved to be a major advancement of enduring fundamental importance to the future of wireless communication.

Progressing from this step forward Marconi inserted a heavy morse key in the primary circuit of the oscillator and in this way was able to make or break the flow of electro-motive force from the battery supply. This in turn governed the production of electromagnetic waves in the secondary circuit. Hence it was possible to regulate emission into spurts or trains of energy. A short tap on the key made a short space of radiation and a long tap a long period. Thus the means of transmitting dots and dashes—requisites for the employment of morse code—to frame messages was evolved.

Attention was also given to the betterment of receiving apparatus. It resulted in an arrangement of aerial wire—coherer—relay and a voltaic cell actuating a morse printing set which recorded the impulses received. The first advance was concerned with redesigning the Branly-type coherer. This instrument, though revolutionary when it emerged as a means of detecting wireless waves, was somewhat capricious in use. It was at times often very sensitive and then for no apparent reason became less sensitive. The relative advantages of various filings and combinations of filings were considered. Ultimately Marconi decided upon a mixture of 95% nickel and 5% silver, carefully sifted to ensure uniform fineness. When inserted in a glass tube, smaller than Branly's, the filings were compacted between two silver plugs very slightly apart. To each end of these plugs was attached a platinum wire which formed external leads for the device. The glass was then evacuated and sealed. The improvements effected by Marconi made this Branly-type device, which Marconi called a cymoscope, far more reliable and sensitive than any of its prototypes.

Next began experiments delving into the relation between height of antenna and maximum transmission range. Marconi found that the greater the height, the greater the reception range, and, by 1895, he had extended this range to a circle of radius of one and one-half miles with the aerial as a centre. Clear morse signals were received within this area when an antenna eight metres high was employed.

This encouraging preliminary work could now be considered completed and to have produced the first practical wireless system. Marconi now journeyed to England for the purpose of patent registration. Upon entry, he had first to undergo the trial of seeing suspicious English custom officials pull his gear apart, but, this past, his application for a patent was registered on 2nd June, 1896.[39]

Testing was resumed and over-water signals were transmitted for a distance of nearly nine miles, while on land a four-mile range was achieved, the discrepancy being due to the now fully understood effect of land attenuation. This example of true, practical, wireless telegraphy was not universally acclaimed. Most people, amongst them technical journalists, regarded the Marconi technique as a novelty; as proving nothing new and merely a repetition of previous experiments conducted by Hertz and Branly. On the other hand, the engineer-in-chief of the General Post Office, Sir William Preece, championed Marconi and expressed the view that "Enough has been done to prove and show that for shipping and lighthouse purposes it will be a great and valuable acquisition."[40] Later events vindicated his confidence.

Professor A. Slaby, of Berlin, was another to recognise the true meaning of Marconi's achievements in signalling over the distance that he did. Despite his utmost efforts, Professor Slaby had only been able to achieve a range of one hundred metres and he knew, that by exceeding this, Marconi had, indeed, contrived a very effective method of wireless telegraphy.

By conducting numerous demonstrations Marconi both improved his telegraphy system and at the same time incited interest from afar. As views on the real significance of his work began to crystallise, Army and Navy officials showed interest and attended tests. For instance they witnessed the one on Salisbury Plain in 1897 when the maximum range of transmission reached a distance of eight miles.[41] In the same year a twelve-mile contact between two Italian warships helped to confirm the military implications of the new medium. In this test wireless telegraphic messages were being handled at speeds of up to twelve and fifteen words per minute. The following year, 1898, marked the occasion of the new wireless telegraphy system being put into commercial use for the first time. Installed for the Corporation of

* Government School, Yornup, W.A.

[37] Institute of Radio Engineers (Aust.): "Proceedings of the World Radio Convention, Sydney, Australia," 1938, p.9.

[38] The problem of discovering a generator to produce quick electrical vibrations "possessing sufficient energy" to bring about "transmission of signals at a distance" confronted Marconi and also Alexander Popov of Russia. The sections quoted are from Popov's report quoted in Fleming: op. cit., p.517.

[39] Gartmann: op. cit., p.147.

[40] Fleming, op. cit., p.521.

[41] Wireless communication received its baptism under fire in the Herero Revolt, German South-West Africa, 1904 to 1908.

JUST ARRIVED! NEW 1964 EDITIONS!

★ A.R.R.L.—Radio Amateur's Handbook

Price 51/6 and 2/6 Post.

The Standard Manual of Amateur Radio Communication

★ The Radio Transistor Handbook

by Stoner & Earnshaw **Price 63/6 and 1/9 Post.**

THIS UP-TO-DATE HANDBOOK COVERS A WIDE RANGE OF COMMUNICATION FOR BOTH AMATEUR RADIO & COMMERCIAL APPLICATIONS

Get your copies now from

McGILL'S AUTHORISED NEWSAGENCY

Established 1860 183-185 ELIZABETH STREET, MELBOURNE, C.1, VIC.

"The G.P.O. is opposite" Phones: 60-1475--6-7

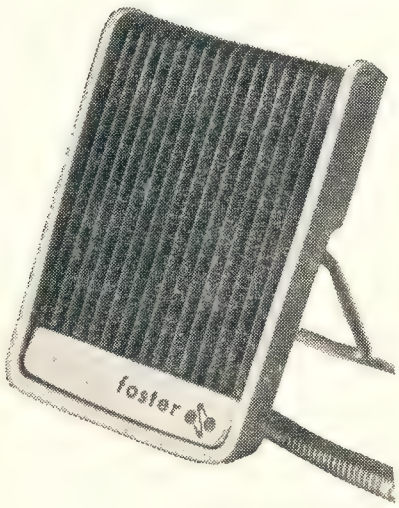

DF-2

FOSTER DYNAMIC MICROPHONES

FOR HAND-DESK USE

SPECIFICATIONS:

Output Impedance .... 50 ohms or 50K ohms
Effective output level .... —55 db. [0 db. = (one) 1V. Microbar]
Frequency response .... 200 to 10,000 c.p.s.

OMNI-DIRECTIONAL DYNAMIC:

SIZE: 3" x 2-1/8" x 1".
Cable: 12 ft. of P.V.C.
Switch: on-off.
Desk Stand. Clip folds for hand use.
Colour: WHITE.
Plastic Diaphragm.

Retail Price
50K ohms
£2/10/7
+ Sales Tax 5/3

A QUALITY PRODUCT OF EXCELLENT DESIGN

Marketed by **ZEPHYR PRODUCTS PTY. LTD.**

58 HIGH STREET, GLEN IRIS, S.E.6, VICTORIA Phones: 25-1300, 25-4556

ZEPHYR

Manufacturers of Radio and Electrical Equipment and Components

Agents: D. K. Northover & Co.; Neil Muller Ltd.; Homecrafts (Tas.) P/L.; Jacoby, Mitchell & Co. P/L.; T. H. Martin P/L.

Lloyd's, the service operated between Ballycastle and the lighthouse on Rathlain.

Step by step, test by test, the practicability of wireless communication was proved and by 1898 superiority over other available means of short-range signalling had been established. Briefly, the points supporting this superiority were:

(i) The system operated in any weather—night or day—clear or foggy.
(ii) It worked very well over sea and high land between stations did not disrupt communication.
(iii) The usual morse code could be used and the apparatus handled by an ordinary telegraphist.
(iv) It could reach previously inaccessible places.
(v) It was not costly, compared with wire telegraphy, and except for the mast upholding the antenna, did not occupy much space.

By this time Marconi had discovered that transmission range increased proportionately with the square of the height of the antenna wire. This meant that with an antenna 100 ft. high, he achieved four times the distance managed by an aerial 50 ft. high. The immediate repercussion was the directing of attention towards pushing antennae upward as a means of developing long distance communication. It was reasonably easy to erect masts up to one, or even two hundred feet, but over that height engineering and financial factors curbed expansion. Hence there resulted a lull in improvement at the transmitting end.

Such was not the case at the receiving end of radio communication. In 1898 a further radical improvement was made to the Marconi receiver which immensely increased its sensitivity and reliability. This improvement involved the insertion of a small air-cored transformer linking the aerial and the coherer circuit. The primary coil was connected to aerial and earth terminals, whilst the secondary was connected to the terminals of the sensitive coherer tube. Previously the coherer had been connected directly between the lower end of the aerial and the earth terminal. Marconi knew that this direct insertion of the coherer was an inefficient arrangement because at that point of the antenna system there occurred a high value of current at a very low voltage. This affected the operation of the coherer because it was a voltage-operated device. On the other hand, as the transformer was able to step up the voltage from a lower to a higher value, it was able to increase the response of the coherer.

Such a transformer had previously been suggested by Sir Oliver Lodge, but he gave no specifications or details of the device to be used. Marconi, on the other hand, engineered the transformer to its proper form, described it in detail and gave it the name of a "jigger".[42] The jigger also endowed a power of selection not presented previously, since in its fabrication the length of the secondary coil winding had to have a definite relation to the desired length of the transmission wave. If the jigger was not wound to suit the transmission wave length employed, no signal was received at all. This made possible, for the first time, discrimination between stations. These step-by-step improvements brought Marconi nearer and nearer to his goal of extended range telegraphy. The first attempt was conveniently and imaginatively chosen, for he decided to span the historic barrier of the English Channel. On 27th March, 1899, he succeeded.[43]

At once interest soared as the press gave publicity to the feat and wireless telegraphy became news. Four months afterwards it was realised that wireless waves must somehow follow the curvature of the earth. British Navy ships, during manoeuvres, used Marconi apparatus to successfully signal over a distance of eighty-five miles. Onward pressed Marconi to develop a system which would hasten the traffic flow between wireless telegraphy stations.

The answer came in the form of a system called Multiple Syntonic Wireless Telegraphy. Under this system it was possible to hook up two transmitters to the same aerial. They could operate simultaneously and, as each transmitter was set to emit on separate and different frequencies, two sets of waves radiated from the aerial at the receiving end. One antenna served two receivers, each one tuned to a separate transmitter. This development made the commercial prospects of wireless telegraphy more attractive since it speeded up the rate of traffic by 100%.

In th year of Australia's Federation, Marconi established contact between the Isle of Wight and the Lizard in Cornwall, a distance of two hundred miles. By then Marconi had made up his mind to make an attempt at bridging the Atlantic with his telegraphic system; not simply as an experiment, but with the view of opening up the route for commercial wireless telegraphy. Having reached the practical limit of aerial height, Marconi decided that the way to achieve trans-Atlantic wireless telegraphy was to employ very high voltages to create much more powerful electro-magnetic waves. To help achieve this requirement the aid was enlisted of an expert, and pioneer in the field of handling extra-high voltage alternating current. Professor J. A. Fleming joined Marconi and they first experimented on a small scale, before beginning construction of the large costly plant needed.

Poldhu, on the coast of Cornwall, was selected as the best site for a transmitter and construction began in October 1900. As Fleming went ahead with the power house, Marconi designed the antenna he was to use. It consisted of twenty masts, each two hundred feet high and arranged in a circle two hundred feet across. The aerial wires formed a conical shape, the tops being insulated and the bottoms gathered in to form a point.

By November of 1901 arrangements were well advanced and so Marconi and two assistants, Kemp and Paget, set sail for Newfoundland to assemble receiving equipment. Arriving there on 5th December, 1901, Marconi ballooned an aerial wire on the 11th, but it broke away. The next day, a Thursday, a kite with aerial wire attached was flown to a height of four hundred feet. Hardly expecting to receive signals on his first attempt, Marconi was surprised and excited when he heard the morse letter "S" . . . on the afternoon of 12th December, 1901.[44] It is interesting to note that because of the rise and fall of the receiving antenna the electrical capacity was varying and so use could not be made of Marconi's specially designed receiver. Instead, he employed a telephone earpiece as a receiver and connected it in series with a coherer. It seems appropriate that this great achievement should also incorporate apparatus bearing the name of two other outstanding pioneers of communication, Alexander Graham Bell and Samuel Morse.

Marconi's feat was remarkable and no other experimenter was to succeed in detecting electro-magntic wave signals across the Atlantic until 1905, and then only at night.[45] This demonstration of Hertzian waves spanning the Atlantic Ocean created a sensation throughout the civilised world.

Subsequent to this, in 1902, Marconi made the discovery that reception differed between night and day. This fact was noted during an experimental voyage on board the S.S. "Philadelphia," when contact was maintained with Poldhu in Cornwall for a distance of 1,551 miles by night, and 700 miles by day. The evidence of this peculiarity led to speculation as to why it should be so and started off the study of wireless wave propagation.[46]

In 1903 transmission was successful over 3,000 miles between Cape Cod, Massachusetts and Poldhu. On this historic occasion, Mr. Roosevelt, President of the United States, sent the following message to King Edward VII.:—

> "To His Majesty King Edward VII., London. In taking advantage of this wonderful triumph of scientific research and ingenuity which has been achieved in perfecting the system of wireless telegraphy, I extend on behalf of the American people the most cordial greetings and good wishes to you and all the people of the British Empire."[47]

Then followed further long range experiments between the "Carlo Alberto," a naval ship stationed in the Mediterranean and placed at Marconi's disposal by a generous Italian Government, and Poldhu. Ranges of up to 1,000 miles over land were attained. These and other experiments advertised the utility of wireless communication to an incredulous public. From the tests made, Marconi gathered knowledge for the inauguration of shipping and later regular trans-Atlantic services.

4. THE ERA OF COMMERCIAL AND TECHNICAL EXPANSION

Before the advent of such, wireless communication as a whole underwent a period of stress. The inauguration of a regular reliable wireless network was no easy triumph. For now two main

[42] Fleming, op. cit., p.526.

[43] Ibid., p.529.

[44] Gartmann: op. cit., p.149.

[45] Erskine-Murray, J., "A Handbook of Wireless Telegraphy," Crosby Lockwood and Son, London, 1911, 3rd edition, p.135.

[46] Of the development of this study more will be said in Chapter 5 on directive antennae.

[47] Fleming, op. cit., p.548.

competitors emerged in the race to erect wireless stations and perfect systems; the Telefunken Company of Germany and the Wireless Telegraphy and Signal Company headed by Marconi. Both opposed one another and each in turn was opposed by the cable companies. Bitter commercial conflicts ensued as the battle of patents, rights, priorities and financial agreements was fought. Eventually the two wireless giants ran into financial troubles as each tried to outdo the other.

Even so, by 1904 some ocean liners were printing news sheets from information received over ships' radio, but the idea of wireless at sea as a worthwhile investment was by no means readily accepted. Ship-owners of that period were reluctant to equip their ships with "the expensive luxury" of radio equipment to enable their captains, as they ironically suggested, "to wish each other a safe journey on the high seas."[48]

Meanwhile, in 1906, wireless communication had attained international status when twenty-seven nations conferred at Berlin for the first World Radio Congress held to discuss matters of international concern. The signal "CQD" became recognised as an international distress signal and was used to startling effect on 23rd January, 1909. On this occasion the value of wireless as a safeguard against calamity at sea was emphatically illustrated. Badly damaged and sinking after a collision with S.S. "Florida" in the Atlantic, the White Star liner "Republic" transmitted the distress signal which resulted in seven vessels racing to her aid. All passengers and crew, who would have in all probability been lost, had it not been for ships' wireless, were saved.[49] Other instances occurred and, gradually, reluctance to equip ships was overcome until by the end of 1909 a total of more than three hundred ships had been fitted with radio apparatus by the Marconi Wireless Telegraphy Company alone.

Prior to this, in 1907, a limited wireless service had been inaugurated between Nova Scotia and Ireland and then extended to include London and Montreal on 3rd February, 1908. Strain was imposed upon wireless telegraphy systems by a demand for more reliability than the limited resources of radio communication could provide at that stage. The year 1910 saw the commencement of regular communication by wireless on a permanent basis between England and the United States of America. This system was managed and installed by the Marconi Wireless Telegraphy Company. However, it was not until just before the First World War that wireless telegraphic services were in a position to seriously challenge the cable and wire telegraphy systems. By then, after much litigation and prolonged deliberation, the two giants, Telefunken and Marconi systems, had reached agreement on 5th March, 1913,[50] and from then on the way was clear to a genuine system of world-wide wireless communication.

Eight years before this, Marconi had established communication between Queenscliffe in Victoria and Devonport in Tasmania, but it was not until 1909 that tenders were accepted for the erection of Australia's first permanent wireless stations at Perth and Sydney. When 1913 came there were nineteen coastal stations throughout Australia in operation maintaining two-way telegraphic communication with a limited number of ships at sea.[51]

And so this chapter details the early pioneering done by Guglielmo Marconi and in so doing chronicles the development of wireless communication from a period of disbelief to one of practical utility wherein trans-oceanic, and indeed, world-wide telegraphy by Hertzian waves was a reality. Without a doubt, the indomitable spirit and inventive genius of Marconi, together with those who gave financial and technical support, were responsible for this great advance. Marconi's work, however, was by no means over and he continued his contribution to radio for many years.

Now, with radio telegraphy a fact, inventive minds were already turning to tackle the problem of transmission of speech by means of wireless communication. Progress had already been made by 1914 but real success did not come until the advent of the transmitting valve, the introduction of which commenced a new era in the history of wireless communication.

(To be continued)

[48] Gartmann: op. cit., p.151.
[49] Hoeling and Hoeling, "The Last Voyage of the Lusitania," Hodder and Stoughton, London, 1956, 1st edition, p.134.
[50] Gartmann: op. cit., p.151.
[51] From an eight-page paper, "1913-1938—A Quarter Century of Radio Engineering in Australia," by A. S. McDonald, Institute of Radio Engineers (Aust.), op. cit.

Phone 34-6539, write or call
WILLIAM WILLIS & Co. Pty. Ltd.
428 Elizabeth St., Melbourne
for GELOSO
Equipment and Components

LASERS

(Continued from Page 8)

Already, laser light beams have been used for transmission of audio and video signals. I.B.M. is in the process of developing a laser space communications networks here on earth using a beam of light as carrier.

We have already seen that the Radio Amateur is capable of developing, building, and launching an earth satellite. Progress in this field has been remarkable. These are the ingredients of a revolution in the hobby. A synthesis of a programme of laser research in conjunction with the present Oscar programme could conceivably result in the development of an Amateur laser space communications network.

Frequencies in the upper microwave, the infra-red, and the visible portions of the spectrum are as yet unallocated. Anyone can experiment now without restriction! This is the time to join in and move toward new dimensions in communications! Use by Amateurs of the bands in which lasers operate could herald the dawn of a new age in Amateur Radio!

We can envision a network of three synchronous Oscar translator satellites capable of receiving and re-transmitting all the message traffic of all the world's Hams on a single beam of light. We can see Hams, equipped with a laser communications system, and their own personal 10 kc. channel to work on.

This is the challenge of the future.

I would appreciate hearing from any and all Amateurs who are currently engaged in laser research and development. I would also like to hear from any Hams who would, at some future date, be interested in participating in laser experiments, or who would like to build a laser of their own. If there is enough interest we can possibly undertake a programme of moving forward with the times toward a revolution in Amateur Radio! ●

DURALUMIN, ALUMINIUM ALLOY TUBING
IDEAL FOR BEAM AERIALS AND T.V.
★ LIGHT ★ STRONG ★ NON-CORROSIVE
STOCKS NOW AVAILABLE FOR IMMEDIATE DELIVERY
ALL DIAMETERS—¼" TO 3"
Price List on Request
STOCKISTS OF SHEETS—ALL SIZES AND GAUGES
GUNNERSEN ALLEN METALS PTY. LTD.
SALMON STREET, PORT MELBOURNE, VIC.
Phone: 64-3351 (10 lines)
Telegrams: "Metals," Melb.
ADELAIDE GAM MELBOURNE
HANSON ROAD, WINGFIELD, S.A.
Phone: 45-6021 (4 lines)
Telegrams: "Metals," Adel.

AN I.F. SPOTTER

JUST recently, under the gentle prodding of the XYL, I cleaned out the years of accumulated junk from the spare room and found myself the proud possessor of some twenty or so i.f. trannies of doubtful vintage, and decidedly unknown kilocycles. Not wanting to be guilty of throwing away any trannies that might one day become useful, I was in a quandary as to how I could sort them into unwanted and wanted, and luckily for me along came an article in that excellent magazine, "73," for April 1964, under the heading of "An I.F. Spotter."

With just two resistors, two capacitors and a tube, it was the answer to my search. The principle of operation is as simple as the construction. The tuned circuit in question is simply made to oscillate at its resonate frequency which can be then determined by tuning its radiated signal on the communication receiver. To set the unknown coil into oscillation requires the use of a simple "two terminal" oscillator as shown in Fig. 1.

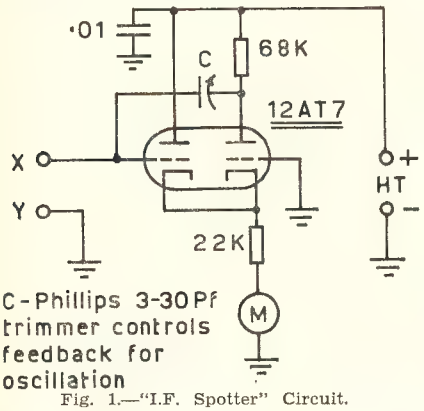

Fig. 1.—"I.F. Spotter" Circuit.

When any tuned circuit is connected to the two points marked X and Y, the circuit will oscillate at its resonant frequency. The construction was simple, it took me about an hour to build it up and try out the first i.f. tranny, and strangely enough for me it worked first time. I did not use the meter shown in the cathode circuit as it was only intended to show if the circuit was oscillating, but since then I have included an 0-5 mA. meter purely as a refinement to show that the circuit was oscillating OK.

This little tester was built in the first place to do just one thing—sort out some old i.f's in the junk box—but it was remarkable how many other jobs it was found capable of doing—and probably it will do tricks that I haven't thought of. One pay-off I discovered by accident was that it made an excellent b.f.o. for a receiver, especially for resolving s.s.b. signals. So much so, that I now have two made up in separate receivers for receiving s.s.b., and whereas before, my reception of this type of signal was somewhat uncertain at times, I can honestly say that now I can resolve with one hundred per cent. satisfaction.

Give it a go—build it up—you will be more than satisfied. Why, it will even test the range over which a tank circuit will tune, and if the tank circuit in question is the final, the meter will indicate when the antenna is brought into resonance.

Nuff sed. If you are not interested now, you never will be. But if it turns out the success it has been for me, don't forget to thank Howard W5WGF, who wrote the article. It was one out of the box for me.

Oh, I nearly forgot, the lead from the grid contact of V1 to the X post should be kept as short as possible with the least capacity to earth.

—WARWICK W. PARSONS, VK5PS.

CRYSTAL PYE DIVISION

Manufacturers of Quartz Crystals for Frequency Control and Crystal Filters for highly selective circuits in the largest and most modern crystal plant in the southern hemisphere announce a new range of:—

CLOSE TOLERANCE GOLD PLATED CRYSTALS FOR AMATEUR APPLICATIONS

★ 1.8 Mc. to 15 Mc. ±0.005% in Style "D" (American HC6/U) Holders. ½" pin spacing. Amateur net **£2/16/3** incl. tax.

★ 15 Mc. to 52 Mc. ±0.005% in Style "D" (American HC6/U) Holders. ½" pin spacing. Amateur net **£3/2/0** incl. tax.

★ 100 Kc. ±0.005% in HC13/U Holders. ½" pin spacing.
1 Mc. ±0.005% in Style "D" (American HC6/U) Holders. ½" pin spacing. Specially designed for Crystal Calibrator purposes. Amateur net **£4/10/0** incl. tax.

★ 455 Kc. (nominal) Crystals for Filter applications in Style "D" or "E" (B7-G) Holders. Amateur net **£4/10/0** incl. tax.

Many other types and tolerances are available from our standard production. Please consult us on your Crystal requirements.

PYE PROPRIETARY LIMITED

CRYSTAL DIVISION

CLARINDA ROAD, CLAYTON, VIC. P.O. BOX 105. PHONE 544-0361

STATE OFFICES IN: ADELAIDE, BRISBANE, HOBART, PERTH AND SYDNEY

A.R.R.L. DX CONTEST

Amateur Radio operators throughout the world are invited to participate in the 31st A.R.R.L. International DX Competition. You may earn a certificate of performance award issued to the top **phone** and **c.w.** scorer in each country. In addition, you might QSO new States for the W.A.S. award or Canadian provinces for the W.A.V.E. award.

1. This 1965 DX Contest will be held over two week-ends for c.w. and two week-ends for phone as follows:

Phone: Feb. 13-14 and March 13-14.

C.w.: Feb. 27-28 and March 27-28.

2. The starting time in each instance is 2400 G.M.T. Friday and ends 2400 G.M.T. Sunday. Phone and c.w. are separate contests.

3. **Object**: The rules are unchanged from last year. Try to QSO as many W-K-VE-VO-KH6-KL7 stations as possible during the contest in as many different call areas possible **per band.**

4. **Exchanges**: DX stations send RS or RST report followed by a three-digit number representing power input. For example, on c.w. you might send 579050, which means RST 579 and power input 50 watts. U.S.A.-Canada stations will send you a number consisting of RS or RST report followed by the name of their state or province.

5. **Scoring**: Repeat QSO on additional bands are permitted. Your multiplier is the total call areas (not states) QSOed **on each band** (maximum of 21 **per band**). The 21 call areas are listed above. Each completed QSO counts three (3) points. Incomplete contacts count two (2) points. **Final Score** is the number of QSO-points times the multiplier.

6. Free log forms are available on request from A.R.R.L. You don't have to use these forms. Logs should contain calls, dates, times, bands, exchanges, and points. Send your log with summary data to:

A.R.R.L. DX Competion,
225 Main Street,
Newington, Conn., U.S.A. 06111.

Your entry must be postmarked by 24th April, 1965, to be eligible. Please enclose photos and soapbox comments with your report.

SUMMARY SHEET

Your summary sheet must contain the following: Section (c.w. or phone), call, Country, Name, Address, Transmitter(s), Receiver(s), Power input(s), antenna(e), number of U.S.A. and Canadian call areas worked on each band, multiplier, number of hours of station operation. Then the usual declaration re rules, etc., and comments (new states worked, improvement in score over last year, band conditions, interesting experiences, etc.

LACK OF NOTES

Many readers overlooked the fact that this issue of "A.R." would not contain any Notes, so they should not write in complaining of the omission. All copy for March "A.R." is due at Box 36, East Melbourne, C.2, by 8th February, 1965.

VKO CALL SIGNS

1965 EXPEDITIONS

Doug Twigg (VK3IJ), of A.N.A.R.E. Headquarters, advises that the following call signs have been issued to 1965 A.N.A.R.E. members:—

Macquarie Island
VK0TO—Trevor Olrog (VK2TO).

Mawson/Antarctica
VK0GW—Gil Webster (ex VK-6ZBW).

Wilkes/Antarctica
VK0MC—John McKenzie (Wilkes, 1963).
VK0KH—Dr. Ken Hicks.

Mail QSL cards for above call signs via W.I.A. (VK3 Inwards QSL Mgr.).

—Eric Trebilcock, L3042.

☆

DETAILS OF U.S.A. COUNTIES

I would be willing to help identify Counties from names of cities and towns given on QSL cards for the U.S.A. County Award. Send list and s.a.s.e. to Charles H. Thorpe, 81 Dawson Road, Allenstown, Rockhampton, Queensland.

—WIA-L4018.

NOW AVAILABLE!

1964-65 ISSUE OF AUSTRALIAN

CALL BOOK

BRIGHT STAR CRYSTALS

FOR ACCURACY, STABILITY, ACTIVITY AND OUTPUT

Our Crystals cover all types and frequencies in common use and include overtone, plated and vacuum mounted. Holders include the following: DC11, FT243, HC-6U, CRA, B7G, Octal, HC-18U.

THE FOLLOWING FISHING-BOAT FREQUENCIES ARE AVAILABLE IN FT243 HOLDERS:—
6280, 4095, 4535, 2760, 2524 Kc.

5.500 Kc. T.V. Sweep Generator Crystals, £3/12/6.
100 Kc. and 1000 Kc. Frequency Standard, £8/10/0 plus 12½% Sales Tax.
Immediate delivery on all above types.

AUDIO AND ULTRASONIC CRYSTALS—Prices on application.
455 Kc. Filter Crystals, vacuum mounted, £6/10/0 each plus 12½% Sales Tax.

ALSO AMATEUR TYPE CRYSTALS—3.5 AND 7 Mc. BAND.

Commercial—0.02% £3/12/6, 0.01% £3/15/6. plus 12½% Sales Tax.
Amateur—from £3 each, plus 12½% Sales Tax.
Regrinds—Amateur £1/10/0, Commercial £1/17/6.

CRYSTALS FOR TAXI AND BUSH FIRE SETS ALSO AVAILABLE.
We would be happy to advise and quote you.

New Zealand Representatives: Messrs. Carrel & Carrel, Box 2102, Auckland.
Contractors to Federal and State Government Departments.

BRIGHT STAR RADIO

46 Eastgate Street, Oakleigh, S.E.12, Vic. **Phone: 57-6387**

With the co-operation of our overseas associates our crystal manufacturing methods are the latest.

SIDEBAND ELECTRONICS ENGINEERING (ARIE BLES)

33 PLATEAU ROAD, SPRINGWOOD, N.S.W. Phone Springwood 394

We specialise in S.S.B. TRANSCEIVERS and Accessories

GALAXY III. plus 240 Volt AC Power Supply plus External VFO, Australian production - - - **£275**
SWAN SW-350 plus 240 Volt AC Power Supply - - - **£300**
HEATH SB-200 Linear Amplifier, assembled - - - - **£185**
HEATH HW-22 Single Band 40 Metre Transceiver - - - - **£110**
DRAKE TR-3 All-Band Transceiver, full 10 Metre Band - - **£400**
GALAXY V. All-Band Transceiver, 1,000 Kc. on 10 Metres - **£300**

Prices include Sales Tax. Terms Cash, F.O.R. Springwood.

Galaxy Transceivers have selectable upper/lower sideband facility without operating frequency shift. Adaptor Plugs for VOX, Calibrator, and External VFO.

Drake Transceivers have built-in VOX and Calibrator, also Adaptor Plug for External VFO.

ASK THE HAM WHO OWNS ONE WITH AN EXTERNAL VFO—A TRANSCEIVER IS NOT COMPLETE WITHOUT ONE!

H.F. BAND TRANSMITTER*

FOR 10-80 METRES, A.M./C.W., RUNNING 50 WATTS – COMPACT DESIGN

A. J. SHEPHERD, G3RKK

THE transmitter described in this article was designed to meet the need for a simple, compact a.m./c.w. design that would give reliable results in fixed or portable use. The p.a. can be run plate-and-screen modulated to an input of about 50 watts on all bands 10-80 metres; 160 metres can quite easily be added if required. In order to reduce weight and ease mechanical problems with the metalwork, the unit does not have a built-in power supply, but may be run from a main p.s.u. or from such portable supplies as may be available.

Great care has been taken to ensure that there is a good margin of stability, screening and decoupling being extremely thorough, and the reliability of the design makes it extremely suitable as a beginner's first all-band transmitter. T.v.i. precautions are reasonably effective, and equal to those in many commercial designs described as "tv.i. proof". With a low-pass filter fitted, this transmitter should be suitable for use in most localities. In fringe areas, where the t.v.i. problem is particularly acute, a very carefully designed mixer v.f.o. system in conjunction with a class B p.a. may be the only answer. Some notes on alternative mixer-v.f.o. systems appear later in this article.

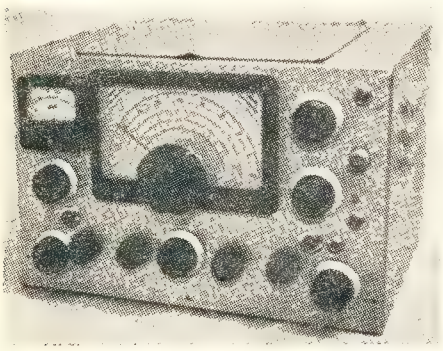

General appearance of the 10-80 Metre Transmitter for a.m./c.w., designed and described by G3RKK. It is a neat and compact job, suitable for fixed-station or portable use, and runs up to 50w. input on all bands. The design includes t.v.i. precautions, and the power supply unit is external.

THE EXCITER

The v.f.o. uses a Clapp circuit with large grid swamp capacities C6, C7 (see Fig. 2a). The v.f.o. is always on the 80-metre band, so that for all bands the working conditions of this stage are such that the EF184 is only just oscillating. Under these conditions the highest order of stability can be achieved.

To obtain good bandspread, there are two v.f.o. ranges—3.5-3.8 Mc. or 3.5-3.6 Mc., selected by the bandswitch wafer S1a. The final output, by frequency multiplication, is: 80m., 3.5-3.8 Mc.; 40m., 7.0-7.2 Mc.; 20m., 14.0-14.4 Mc.; 15m., 21.0-21.6 Mc.; 10m., 28.0-30.2 Mc. A perfectly adequate tuning rate is given by a dial with a 10 : 1 reduction ratio. The oscillator units are specially produced by Electroniques (Felixstowe) Ltd., and allow excellent stability to be obtained.

● This is the sort of transmitter that would be very suitable for the beginner (with some experience of constructional work) and will equally be of interest to those requiring a transmitter for general fixed-station or portable work, on c.w. and a.m. phone. In the circuitry and construction, all possible t.v.i.-proofing has been incorporated and, with an l.p.f. on the output side, this transmitter might well be found safe to use even in the most delicate fringe-area situation—at least on its two lower-frequency bands.

A small amount of temperature compensation is provided externally by C1 and C4, and for best results their values should be adjusted experimentally for minimum drift. C3 (C3A, C3B, C3C) is a silver-plated 3-gang component; two sections in parallel are used on 80 and 10 metres, the remaining section being for 40, 20 and 15 metres.

Great care has been taken to minimise pulling of the oscillator frequency by subsequent stages—especially the p.a. This has been fully achieved on all bands except 80 metres, when all the amplifiers are operating straight through, and some pulling does occur on this band as the p.a. is tuned through resonance. Even this could probably be avoided by using an ECF804 or ECF82 instead of the EF184, and wiring the triode section as a cathode follower isolation stage. R2 and C59 would then have to be adjusted to maintain the correct oscillator conditions.

The oscillator output circuit, which is of the electron-coupled type, has a resistance load on 80, 40 and 20 metres, but is operated as a doubler on 15 and 10 metres. It has been found that this is less detrimental to stability than driving the buffer into grid current and doubling there.

Output is taken from V1 anode via C12, which is variable for optimum coupling, to V2, an untuned Class A buffer amplifier. This stage provides good isolation between the v.f.o. and the frequency multiplying stages, whilst affording a reasonable amount of gain. In the prototype, the h.t. supply to this stage is stabilised. However, this is not strictly necessary, and both arrangements are shown in the p.s.u. circuit. If the stabilised version is not used, then the h.t. for the stage can be taken from the junction of R10 and R14 via a 2.2K resistor.

The netting switch S2 enables the exciter to operate when the remainder of the transmitter is switched off.

V3 (6AU6) is an untuned buffer on 80 metres, a doubler on 40, 20 and 10 metres and a tuned buffer on 15 metres. Wideband couplers, L3 and L4, are used to reduce the number of front-panel controls. The output of V3 is controlled by varying the screen voltage to this stage by VR1. In order that unwanted harmonic production may be kept to a minimum, it is desirable that V3 and V4 should operate as near to the Class B condition as possible, whilst providing sufficient drive to the next stage.

V4 (5763) is the driver stage, working as a tuned buffer on 80 and 40 metres, a doubler on 20 and 10 metres, and a tripler on 15 metres. The anode circuit is accurately tuned on all bands by a front-panel trimmer C28, to keep harmonic production to a minimum. The appropriate tuning coil (L5-L9) for the band in use is selected by S1d.

This exciter has given most satisfactory service, with good stability and no trouble from t.v.i. With careful construction the v.f.o. drift can be reduced to less than 50 c.p.s. per hour. Even when multiplied to 30 Mc., this only amounts to 400 c.p.s. per hour, which is hardly excessive.

MIXER V.F.O's

However, those living on t.v. fringe areas, or who require better stability on the higher-frequency bands, may like to experiment with mixer v.f.o's.

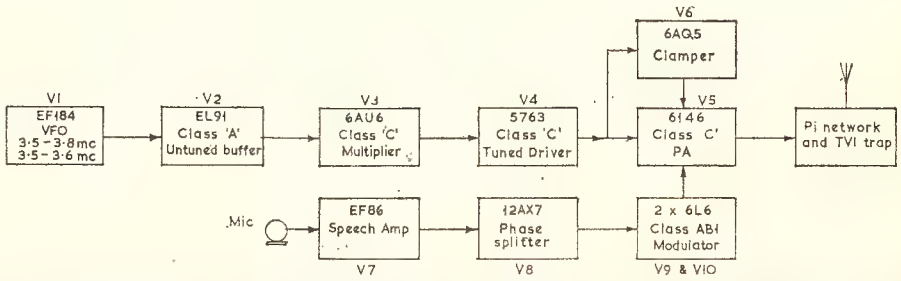

Fig. 1.—Block diagram of the a.m./c.w. transmitter designed and described by G3RKK. It runs about 50 watts input in the 6146 p.a., and covers all bands from 10 to 80 metres. Commercial coils are used throughout and the circuit arrangement is such that level drive is obtained through the whole range. Circuit details are given Figs. 2, 3 and 4.

* Reprinted from "The Short Wave Magazine," June, July, August, 1964.

In these, the v.f.o. is tuned over a fixed range and mixed with the output from a crystal oscillator to provide the required output frequency. In this way, frequency multiplication is avoided and so there is likely to be less trouble from harmonic output. Also, as there is no frequency multiplication, the stability of the final output is that of the v.f.o. and crystal oscillator—about 80 c.p.s. per hour on all bands.

Details of various types of mixer-v.f.o's have been published from time to time, and there is no reason why such an arrangement should not be incorporated in this design instead of the frequency multipliers. In addition to the increased stability, a worthwhile reduction in harmonic output may be obtained, provided that the mixing frequencies are carefully selected, the mixers are run at low level, all subsequent stages are in Class A, and adequate filtering is included to reject spurious products of the mixing process. However, these notes are only intended for the more experienced constructor. The beginner is advised to keep to the frequency multiplier unit used in the prototype, which is perfectly satisfactory unless the t.v.i. problem is very difficult indeed.

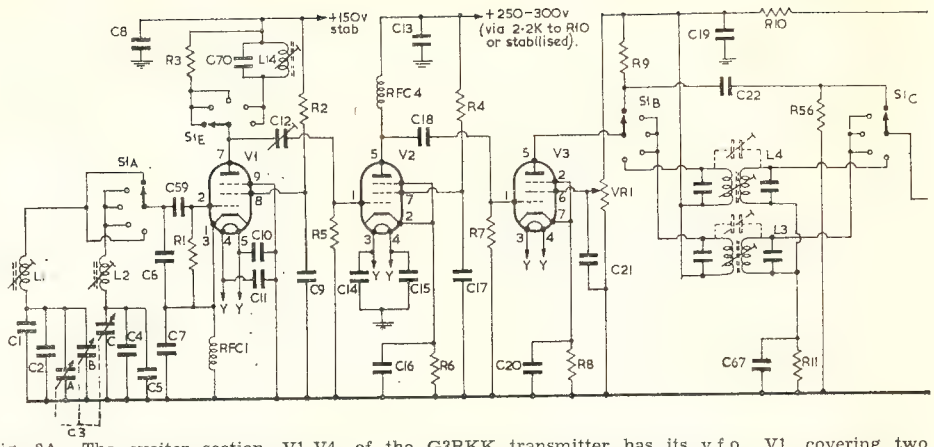

Fig. 2A.—The exciter section, V1-V4, of the G3RKK transmitter has its v.f.o., V1, covering two ranges, for reasons explained in the text. (Note: Read this circuit as including Fig. 2B opposite.)

In some areas a low-pass filter, in the coax. feeder into the a.t.u. or aerial, may also be required. As both the grid and anode circuits are on the same frequency, careful screening is required if instability is to be avoided. Nevertheless, if the layout diagrams are carefully followed, neutralisation should not be necessary, although it is provided for in the circuitry and some may like to include it to increase the margin of stability.

POWER AMPLIFIER

The p.a. (Fig. 3) uses a single 6146 (V5) operating in Class C. The 6146 is very suitable for this purpose, combining small size with high efficiency. As grid current bias is used, it is protected by a triode-connected 6AQ5 (V6) acting as a clamp valve. Normally, this valve is cut off by the bias on the p.a. If the excitation is removed, the bias is lost and V6 conducts heavily, reducing the voltage on the screen of V5. This reduces the anode current of V5 and ensures that the maximum anode dissipation of 20 watts is not exceeded.

The inclusion of the capacitor C33 in the V6 h.t. line is rather unusual. It has been found that it improves the modulating characteristics of the stage by permitting the screen to follow the modulating voltage morse closely. It should be noted that, in order to obtain linear modulation, it is necessary to ensure that the p.a. is operating under the conditions recommended by the valve manufacturer. The correct voltages at various points are given in Table 2 for an h.t. voltage of 450, which is the best for general use. The correct drive must also be maintained, and the aerial loading is fairly critical. Unlike linear amplifiers, anode modulated Class C amplifiers are best loaded lightly in the absence of an oscilloscope to examine the modulated waveform.

Full precautions against parasitic oscillations and other forms of instability are taken, as it is generally easier to include full protection in the design than to attempt to cure the trouble once it arises. Parasitic stoppers L10, R19 and L11, R20 are included in the grid and anode circuits, and multiple by-pass condensers are used on the anode and screen h.t. supplies, ensuring that effective by-passing is obtained at all frequencies.

The output is tuned by a conventional band-switched pi-network, and a t.v.i. trap L13, C49 tuned to the local B.B.C. t.v. channel is fitted across the output.

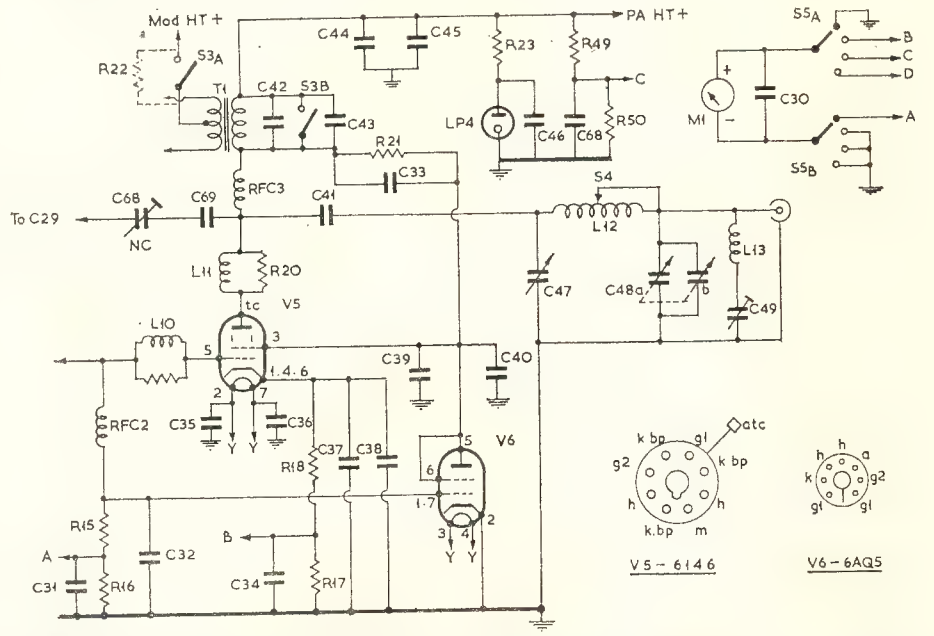

Fig. 3.—Circuit of the p.a. and its clamper stage. In some layouts, neutralisation may be necessary and this is provided for by the C68, C69 connection. C33 is explained in the text—it improves the p.a. action under modulation. Data for the construction of the p.a. tank coil, L12, are given separately. C49, L13 comprise a harmonic-rejection circuit, tunable to the local t.v. channel. Alternative methods of keying and clamping will be shown in Figs. 6 and 7 in Part 2. (Note: The resistor body for L10 should be marked R19. Also there are two C68's. One, in parallel with R50, is 0.001 μF.; other, neutralising condenser, is 1-10 pF. rated 1kV.)

C30, C31, C32, C34—0.002 μF. 500v.w. disc ceramic.
C33—0.003 μF., 500v.w. disc ceramic.
C35, C36, C39, C46, C68—0.001 μF., 500v.w. disc ceramic.
C37—0.01 μF., 500v.w. disc ceramic.
C38, C40—15 pF., 500v.w. ceramic.
C41—0.001 μF., rated 3 kV.
C42—0.01 μF., ceramic, rated 1 kV.
C43—100 pF., rated 1 kV.
C44—0.001 μF., ceramic, rated 1 kV.
C45—15 pF., ceramic or mica, rated 1 kV.
C47—250 pF. variable, type 817 Eddystone.
C48—500 plus 500 pF. BC type twin-gang, sections in parallel (0.001 μF.).
C49—3-30 pF., Philips trimmer.
C68*—1-10 pF., neut., rated 1 kV.
C69*—47 pF., rated 2 kV.
R15—18K ohms, 2w.
R16, R17—See text.
R18—82 ohms, 2w.
R19—500 ohms.
R20—100 ohms.
R21—Three 68K ohms in parallel, 2w.
R22—20K ohms, 10w.
R23—220K ohms.
R49—See text.
R50—10K ohms.
RFC2—2.5 mH. r.f. choke.
RFC3—R.f. choke, p.a. type.
S3—3-p., 2-w., ceramic Phone/C.w.
S4—1-p., 6-w., ceramic with shorting plate (see text).
S5—2-p., 4-w., meter.
M1—0.5 mA. moving coil.
L10, L11—APC's on R19, R20 (see text).
L12—Pi-network tank coil (see text).
L13—9 turns, 18g., ½ inch diam., self-supporting, turns spaced (local t.v. channel).
PL4—250v. neon.
V5—6146.
V6—6AQ5.

Notes:
All resistors are rated ½ watt carbon, unless otherwise stated.
C68* and C69* optional if neutralising required—otherwise, use C29* 0.002 μF. as given with Fig. 2.
Data for tank coil L12 given in text.

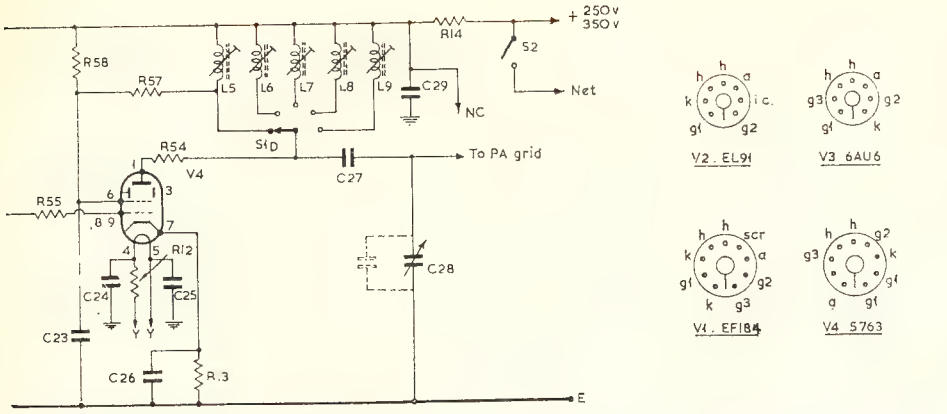

Fig. 2B—Continuation of exciter section. V4, the driver stage, is a 5763, giving ample drive into the p.a. on all bands 3.5-28 Mc. The circuitry could be adapted for 160 metres if required. (Note: R57 should be across L5 and not as shown.)

TABLE OF VALUES
Figs. 2a and 2b.—Exciter Section H.F. Band Tx.

C1—3 pF., ceramic N750 negative temperature.
C2—87 pF., poly.
C3—7-18 pF., three-gang.
C4—5 pF., ceramic N750 negative temperature.
C5—134 pF. poly.
C6, C7—0.0011 μF., poly.
C8, C13, C16, C17, C20, C21, C26—0.005 μF., 500 volt working, disc ceramic.
C9—0.01 μF., 500v.w. disc ceramic.
C10, C11, C14, C15, C24, C25—0.001 μF., 500v.w. disc ceramic.
C12—1-10 pF., air trimmer.
C18, C70—50 pF., silver mica.
C19, C23, C67—0.002 μF., 500v.w. disc ceramic.
C22, C27—100 pF., ceramic.
C28—25 pF., 10 pF. in parallel.
C29*—400 pF., 500v.w.
C59—20 pF., silver mica.
R1, R2, R11, R56—47K ohms.
R3, R4—10K ohms.
R5—100K ohms.
R6—220 ohms.
R7, R57—22K ohms.
R8—150 ohms.
R9, R58—15K ohms.
R10—2.7K ohms, 2w.
R12—See text.
R13—330 ohms, 2w.
R14—470 ohms, 2w.
R54—47 ohms.
R55—470 ohms.
VR1—100K ohm potentiometer, drive control.
L1 -3.5-3.6 Mc., type DLM (Electroniques).
L2—3.5-3.8 Mc., type DLM (Electroniques).
L3—14 Mc., W/B coupler (Electroniques).
L4—7 Mc., W/B coupler (Electroniques).
L5—Type BP80.
L6, L14—Type BP40.
L7—Type BP20.
L8—Type BP15.
L9—Type BP10.
RFC1, RFC4—R.f. Chokes, type FCC5 (Electroniques).
S1A-S1E—Trolex cer., 4-wafer, 2-p., 6-w.
S2—S.p.s.t. rotary.
V1—EF184.
V2—EL91.
V3—6AU6.
V4—5763.

Notes:
C29* can be 0.002 μF. if neut. not required.
All resistors are ½ watt carbon unless otherwise stated.
Coils L5-L9 are Electroniques standard types.
Slow motion drive for C3 can be Eddystone 598 or Electroniques type SMD.
V.f.o. construction in Eddystone box type 650.

A single meter is fitted, which is switched across shunt resistors R16, R17, R46 and R49, R50 to check p.a. grid and cathode currents, modulator cathode and p.a. h.t. voltage. Cathode current is the sum of anode, grid and screen currents, and is measured in preference to anode current to avoid bringing high voltages to the front panel. The meter switch S5 should be of the break-before-make type. All metering circuits are fully decoupled.

Panel lights are provided to show when the p.a. and modulator h.t. and l.t. supplies are on. This is both a safety measure and an operating convenience.

The phone/c.w. switch S3 (S3A, S3B, S3C) disconnects the h.t. supply from the modulator and shorts the secondary of the modulation transformer to prevent keying transients which may break down the insulation—apart from putting a chirp on the note. Further details of keying arrangements are not shown in the circuit diagram as it is felt that most readers will wish to incorporate their own to work in with the existing station switching arrangements. For those who do not have a pet system, there are several to be recommended for this design.

The simplest, and in some ways, the most satisfactory is cathode keying of the p.a. (Fig. 6). The disadvantage is that the choke Ch. must pass the full p.a. cathode current, and will thus be a rather bulky component. For this reason, it may be considered preferable to key V4 in the same way. This is permissible as V5 is protected by the clamp valve V6. The circuit is the same as that given in Fig. 6, but the component values are different. Ch. now has only to pass about 30 mA., and a "softer" keying characteristic is required as it will be hardened by any following Class C amplifier—in this case the p.a. The values given for the click filter components are only approximate and in practice are best found by experiment. As it is generally inconvenient to try different inductors, a 500 ohm, 2W., variable resistor of suitable wattage may be connected in series with Ch. and adjusted to give the required "make" effect. Similarly, R51 can be set to give the required "break" characteristic. For those who wish to try a break-in system, V1 and V4 must be keyed in sequence, the order being V1 on, V4 on, V4 off, V1 off. This may be achieved mechanically by suitably adjusted relays or electronically by flip-flop circuits. Many articles about various systems of keying have been published from time to time, and the reader is referred to one of these for further details.

THE MODULATOR

This is shown in Fig. 4 and has been designed to give good speech quality without undue elaboration. The speech amplifier (V7) is an EF86 audio pentode, with its input circuit arranged for a high impedance crystal microphone. This valve is especially suitable for low-noise audio amplifier service; it has a specially wound heater and ample internal screening and bracing to prevent hum and microphony. The h.t. supply is decoupled by C56, R28, while C51, R24 provide a low-pass filter to prevent r.f. pick-up at the microphone socket, which could cause trouble in the modulator.

The phase splitter circuit is of the paraphase type, chosen mainly because of its high gain. It is not the automatic self-balancing circuit, hence the balance must be adjusted by means of VR3. This is not necessarily a disadvantage, as self-balancing circuits are not always very happy with the fluctuating load presented by the p.a. The circuit shown here should have sufficient gain for most microphones normally used by Amateurs. If more gain is required, to enable a low output microphone or a self-balancing phase splitter to be used, the EF86 speech amplifier could be replaced by one using an ECC83 double triode. A suitable circuit is that incorporated in the G3BDQ transmitter, described in the October 1963 "Short Wave Magazine". The coupling time constants in the speech amplifier are chosen to reduce the response below

Valve	R44, R45 (Ω)	R39 (K)	R_L (K) a—a	Heater Current 6.3v. (each valve)	H.T. Voltage	Clearance (min.) above chassis	Spacing (centre to centre)	Comments
6L6 or 6L6GT	500	4.2	9	0.9A.	400	4 inch	3 inch	
6L6G	500	4.2	9	0.9A.	400	5¼ inch	3½ inch	This version has a larger bulb than the above.
KT66	500	3.9	8	1.3A.	400	5¾ inch	3½ inch	
807	400	4.2	8.5	0.9A.	450	5¾ inch	3½ inch	Top cap anode.
5B255M 5B254M	400	4.2	8.5	0.9A.	450	3½ inch	2½ inch	5B254M has top cap anode.
EL84	130	0.5	8	0.76A.	300	3 inch	2 inch	Output 17w. audio for low power version.

Table 1.—Modulator Valves.

500 c.p.s., allowing a significant increase in the average modulating depth.

In the prototype the output valves used are metal 6L6s operating in Class AB1, providing an audio power of about 25 watts. Alternative valves are the 6L6GT, 6L6G, KT66, 807, 5B255M, etc. The necessary changes of component values with these valves are in Table 1. Ample ventilation in accordance with the valve manufacturer's recommendations must be provided.

Parasitic stopper resistors are fitted in the anodes, control grids and screens of the modulator valves, and all supplies are decoupled for both r.f. and a.f. C42 is connected across the secondary of the modulation transformer to reduce the response at high frequencies, and a small amount of negative feedback is applied over this stage via R33, R36. If microphones of the high-fidelity type are to be used, a further low-pass filter between the phase splitter and speech amplifier may be needed to prevent the signal from occupying an excessive bandwidth. Separate cathode resistors are provided for each valve, but they are taken to earth via the common shunt R46 to enable the combined cathode currents to be monitored on the meter.

The heaters are wired in two balanced systems which may be connected in series or parallel to allow 6.3 or 12.6 volt supplies to be used. All power supplies are taken to an octal and a 3-pin socket at the back of the transmitter to allow the greatest flexibility. This also permits the modulator heater supplies to be disconnected when operating portable c.w.

CONSTRUCTION

It is recommended that the transmitter be built on a 16g. aluminium chassis size 2½" x 12" x 10", fitted with a 13" x 8½" front panel. That used in the prototype was slightly smaller, accounting for the cramping in the speech amplifier and v.f.o. compartments. The chassis is sub-divided above and below into various screened compartments, as shown in the pictures. Apart from the obvious purpose of preventing instability in the transmitter caused by stray coupling, it greatly adds to the rigidity of the structure and reduces the possibility of t.v.i. caused by radiation from the transmitter itself. Bottom plates (not shown in the photographs) are fitted to the v.f.o. and p.a. loading compartments.

It is recommended that all the metal work be bent and completely drilled before the wiring is commenced. At this stage the main components can be mounted to ensure that everything fits properly. It is very much easier to correct a mistake at this stage than after final assembly has taken place. All the screening is bent from 16g. aluminium. In the prototype the v.f.o. was built on a sub-chassis for experimental purposes. (This will not be necessary unless it is desired to experiment with mixer v.f.o's.) The position of all the main components for which holes must be drilled are shown in the pictures, but detailed drilling diagrams cannot be given in view of the lack of standardisation of some components.

EXCITER

The first three stages are built in a medium-size Eddystone diecast box (650), which provides a very rigid framework together with a high degree of electrical screening, and protection against temperature variation and draught.

The box should be drilled first and then used as a template to drill the chassis. Good quality ceramic or nylon-skirted valveholders, with screens for V1, V2, V3 should be used. The bandswitch must be assembled at the same time as the box is mounted on the chassis, and before the screens are fitted. The screen inside the diacast box is an integral part of the bandswitch assembly and must be fixed at the same time as the bandswitch. The later wiring will be much easier if the switch wafers S1A-E are wired up before assembly. The coils should be mounted as far from one another and from the sides of the box as possible if the Q is not to be seriously impaired. (There is room for improvement on the prototype in this respect.)

Wiring is point-to-point where possible, but the use of tap-strips is essential if a reasonably neat layout is to be achieved. The valve-holders should be orientated for the best wiring run and care taken to ensure that the grid and anode circuits are isolated from one another. When wiring up the v.f.o., heavy gauge wire (at least 18g.) should be used, and all components especially rigidly mounted. The tuning condenser is mounted on a screening bracket above the chassis and connected to the drive mechanism by a flexible coupler. A single earthing point should be used for each stage, and all decoupling capacitors should be fitted as close as possible to the valve-holder pins. Care must be taken when soldering to the coils to avoid melting the polystyrene insulation.

The wiring of the p.a. is quite straightforward, and the same considerations about earthing and decoupling apply here also. In view of the high voltages present, it is essential that conservatively-rated components as specified be used and special care taken to prevent shorts and arcing. Also, above the chassis full precautions must be taken to ensure that the operator cannot accidentally touch a point of high voltage.

The anode r.f. choke should be of the type specially wound for h.f. p.a. use, e.g. K.W. or So-Rad. Ordinary types are apt to have series resonances inside one or more of the Amateur bands, with disastrous results. The pi-network coil used in the prototype was the K.W. design which is ready wound and fitted with a ceramic bandswitch. Other suitable assemblies are the Geloso 4/112 or the Codar PI-NET575. The latter requires a separate bandswitch, which should be a good quality ceramic type. For those wishing to wind their own p.a. coils, the details are: 30 turns,

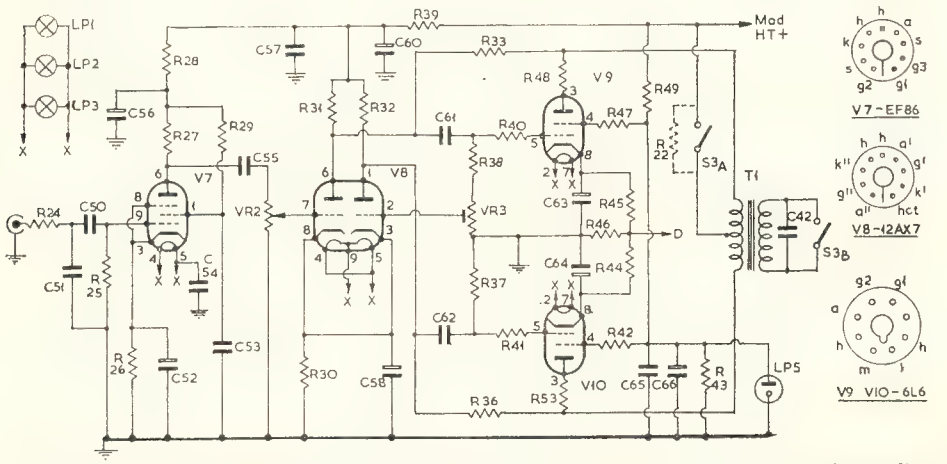

Fig. 4.—The speech amplifier/modulator for the G3RKK a.m./c.w. transmitter. V8 is a phase-splitter to drive the push-pull 6L6s; these are carefully balanced (see text) and other valve types may be used instead of the 6L6s—such as EL84s for less audio power in a QRP version of the transmitter. The switching protects the modulation transformer against transients when on c.w., an important point too often overlooked in some commercial designs; there should be no rise-and-fall on keying across any iron-cored component in the p.a. circuit, with the possible exception of the thump-filter across the key itself. The modulation transformer specified for this design is that sold by K.W. Electronics with their "Vanguard" transmitter. Whatever transformer is used, it must be rated for at least 25 watts of audio.

C42—0.01 μF., ceramic, rated at 1 kV.
C50, C55, C61, C62—0.001 μF., silver mica.
C51—200 pF.
C52—50 μF., 25v. electrolytic.
C53—0.1 μF., 500v.w.
C54, C57—0.005 μF., ceramic.
C56, C60—8 μF., 450v.w.
C58—25 μF., 25v.w. electrolytic.
C63, C64—25 μF., 50v.w.
C65—0.01 μF., 500v.w.
C66—8 μF., 500v.w. electrolytic.

R24, R28—47K ohms.
R25, R29—1 megohm.
R26—2.2K ohms.
R27, R31, R32—220K ohms, 5% high-stability.
R30—1.5K ohms.
R33, R36—2.2 megohms, 5% high stability.
R34—22K ohms.
R37, R38—680K ohms, 5% high stability.
R39—22K ohms, 1w.
R40, R41—10K ohms.
R42, R47, R48, R53—100 ohms, 2w.
R43—10K ohms, 10w.
R44, R45—470 ohms, 2w.
R46—See text.
R49—4.7K ohms, 10w.
VR2—500K ohms, a.f. gain.
VR3—25K ohms, balancing phase-splitter.
S3A-B—3-p., 2-w., Phone/C.W.
T1—Modulation transformer Woden UM1 or similar. (see text).
PL1—6.3v. heater-on indicator.
PL2*, PL3*—6.3v. 300 mA. dial lights.
PL5—250v. red neon.

V7—EF86.
V8—12AX7 (ECC83).
V9, V10—6L6 (see text).

Notes:
All resistors are ½ watt carbon unless stated otherwise.
*Lamps PL2, PL3 must be fitted when equipment used on 12v. supply.
For QRP working o/p valves can be EL84 (see text).
Alternative modulator valve types are given in Table 1.

wound 12 t.p.i. on a 1½" diam. former, tapped at the 27th, 12th, 8th, 5th and 3rd turns. This will give above optimum inductance in the 80 metre positions to allow the use of a standard 0.001 μF. loading capacitor; and below optimum on 15 and 10 metres, because of the difficulty of limiting stray and minimum capacities to the optimum values.

Parasitic stoppers, which should be soldered directly to the valve-holder or top cap, are made by winding a few turns of 22g. enamelled wire around a half-watt resistor. These are designated L10, R19 and L11, R20 in Fig. 3. The compartment containing C48 is fitted with a bottom plate to prevent r.f. from leaking round the screen into the grid compartment. Complete screening of the p.a. above chassis is unnecessary from the point of view of stability, but may be desirable as regards t.v.i. suppression. If the p.a. is to be completely screened, mesh must be used for the top of the screening box to allow adequate ventilation.

The lamp on the front panel labelled "R.F. Out" was originally connected to a loop wound round the p.a. pi-coil, and by its brightness gave a rough indication of the tuning. After burning out a large number of bulbs in an attempt to achieve uniform coupling on all bands, its use was abandoned in favour of an s.w.r. meter! The t.v.i. trap consists of a Philips' trimmer and an air-spaced coil and should be mounted close to the output socket.

In the speech amplifier, which should be carefully constructed, particular care must be taken to avoid mains hum in the early stages. All earth returns for the entire modulation are taken straight to a bus-bar of 16g. tinned copper wire, which is earthed at one end only, to avoid hum loops.

Similar comments apply to the phase-splitter stage. High stability resistors should be used where stated to maintain a good balance and, for the same reason, corresponding components in each half of the push-pull modulator should be carefully compared. The parasitic stoppers R42, R47, R41, R40, R48, R54 must be wired straight on to the valve-holders.

The modulation transformer should have a rating of at least 25 watts a.f., and must match the modulator valves to the p.a. A pair of 6146s in Class AB1 and 400 volts h.t. require an anode-to-anode load of 9,000 ohms—the corresponding figure for other modulator valves is given in Table 1. A 6146 operating at 50 watts input with an anode current of 115 mA. has an anode impedance of 4,000 ohms. The transformer used on the prototype is manufactured by Banner Electronics and is sold by K.W. Electronics as a spare part of their "Vanguard" transmitter. A slightly more expensive multi-range type is the Woden UM1. This has the advantage that it can be used with practically any combination of modulator and p.a. valves.

METERING

The shunts for the meter are fitted directly in the earth returns of the stages to which they belong—not on the meter switch. The connections from the shunts to the switch need not be made using screened cable provided that they are carefully routed and decoupled at each end.

The ranges required are: 0-5 mA. (grid current), shunt R16; 0-150 mA. (p.a. and modulator cathode currents), shunts R17 and R46; 0-1,000v. (p.a. h.t. voltage), multiplier R49. Any meter with a full scale deflection of less than 5 mA. may be used, the shunts being adjusted accordingly.

POWER SUPPLIES

The basic power requirements for the transmitter are: V.f.o., 150v. 10 mA. stabilised; Buffer, 250-300v., 10 mA., preferably stabilised; Exciter, 300-400v. 50 mA.; P.a., 450v. 120 mA.; Modulator, see Table 1, 120 mA.; Heaters, 6.3v., a.c. or d.c., at 8 amps., or 12.6v., a.c. or d.c. at 4 amps.

There are many possible designs for suitable power supply units. The reader will usually wish to use transformers and chokes that he can obtain on the surplus market, so these notes will be kept as general as possible.

Several apparently obscure faults can result from bad power supply design, particularly from interaction between the different supplies. Many of these arise from a combination of the following factors:—

(1) The current taken by a Class AB modulator varies with the amplitude of the speech input.
(2) When the p.a. or exciter is keyed, there are large variations in the current taken by the stage in question and the p.a.
(3) If an h.t. supply is not adequately decoupled at all frequencies, it may be modulated by either r.f. or a.f. which could then be passed to the low level stages. Reasonable protection against this is included in the present design.

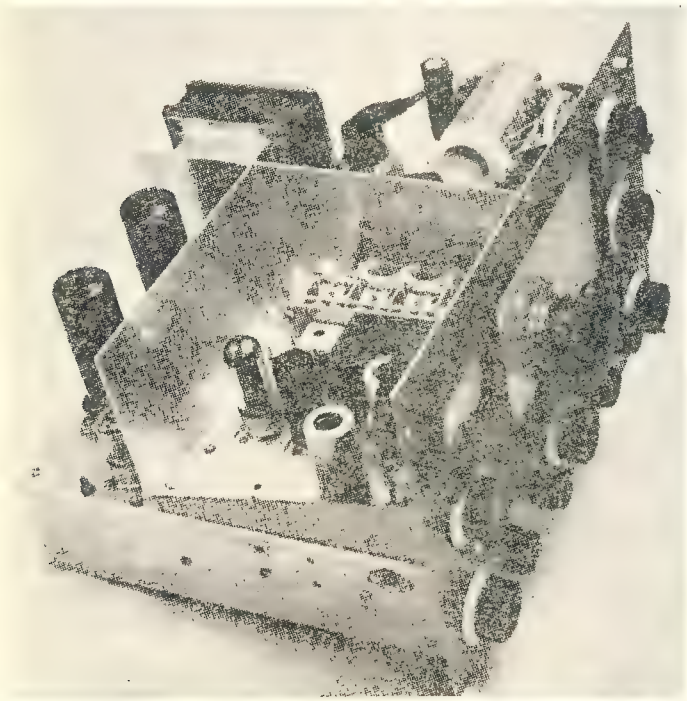

Construction behind the panel of the G3RKK transmitter. The exciter section is in the foreground screened compartment, also containing V7, the speech amplifier, which is the canned valve in nearest view. The driver stage V8 and the 6L6 modulators are behind, with the modulation transformer at upper left. The 6146 p.a. is in the upper right-hand compartment, with the tapped coil L12 and the switch assembly S4—see circuit diagram Fig. 3. The three-gang tuner is C3A-C3C in Fig. 2.

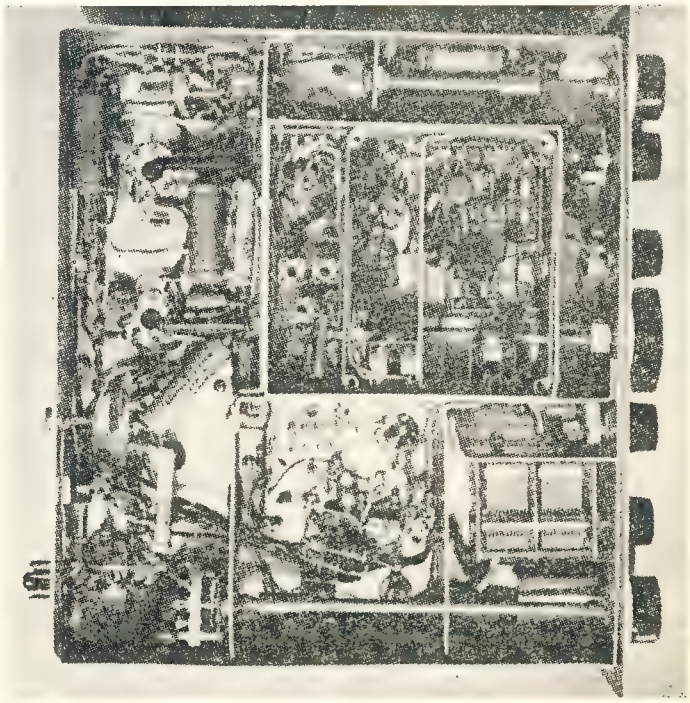

Under-chassis wiring and layout in the transmitter designed and constructed by G3RKK. The detail in this view is such that the placement of most of the parts can be followed by reference to the main circuit diagrams. The condenser at lower right is C48 in Fig. 3, with C49, to tune out the local t.v. channel, immediately above.

FOSTER DYNAMIC MICROPHONES

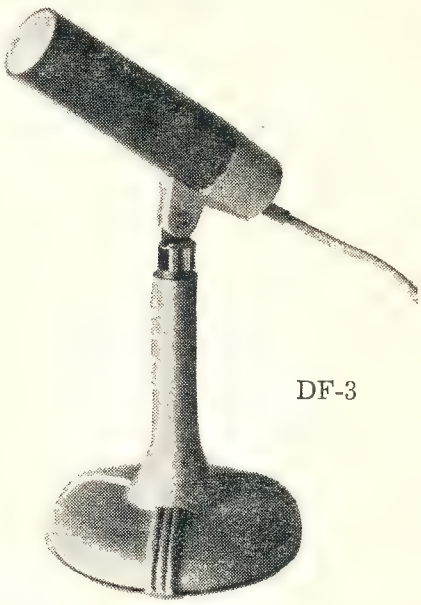

DF-3

SPECIFICATIONS:

Output Impedance .... 50 ohms or 50K ohms
Effective output level .... —55 db. [0 db. = (one) 1V. Microbar]
Frequency response .... 50 to 15,000 c.p.s.

OMNI-DIRECTIONAL DYNAMIC:

Plastic Diaphragm.
Size: 4½" long, 1¼" diameter.
Cable: 12 ft. of P.V.C.
Swivel fits 5/8" 26 t.p.i. Stands.
Colour: TWO-TONE GREY.

Retail Price 50 ohms: £4/7/9 + Sales Tax 10/11
Retail Price 50K ohms: £4/10/0 + Sales Tax 11/3

A QUALITY PRODUCT FOR TAPE RECORDERS & P.A. USERS

Marketed by **ZEPHYR PRODUCTS PTY. LTD.**

58 HIGH STREET, GLEN IRIS, S.E.6, VICTORIA Phones: 25-1300, 25-4556

Manufacturers of Radio and Electrical Equipment and Components

Agents: D. K. Northover & Co.; Neil Muller Ltd.; Homecrafts (Tas.) P/L.; Jacoby, Mitchell & Co. P/L.; T. H. Martin P/L.

A LARGE RANGE OF TRANSMITTERS, RECEIVERS, TEST GEAR, AND DISPOSALS RADIO PARTS AVAILABLE

CALL IN AND SEE US

NEW VALVES

6AC7 **5/-** each or **5** for a **£1** 12AT7 **12/-** ea.
6AQ4 **10/-** ea. 6FQ5 **8/-** ea. 12AU6 **9/-** ea.
6F6 **7/6** ea. 6X5 **12/-** ea. 12BA6 **9/-** ea.

OTHER VALVES

832 **15/-** each; TT15 **15/-** each with socket; QE04/7 **25/-** each; QQV06/40 **95/-** each; ACT25 **£3** each; DET22 **10/-** each; **DET24** 10/- ea.

NEW TURRET TUNERS

13-Channel, complete with biscuits and tubes, ideal basis for com. receiver front-end, **£9.**

AIRCRAFT RECEIVERS

Type AVR22, contains three 12BA6s, four 12AT6s, one 12BE6. Freq. 195 Kc. to 8 Mc. A very late model receiver. With Manual, **£35.**

BC221 FREQUENCY METER

With calibration book and 1 Mc. crystal, **£45.**

C.R.O. TUBES, Brand New

CV407, 3½", E.S., **10/-.** CV392, 9", E.M., **10/-.** VCR97, 6½", E.S., **35/-.**

OSCILLOSCOPES

A.W.A. 2" portable, with handbook and spare 902, **£24.**
A.W.A. 5", brand new, **£110.**

CRYSTALS

Frequencies available from 2 Mc. to 15 Mc. fundamental, or to 120 Mc. overtone. In FT243, HC6/U and DC11 holders. Also few 300 Kc. gold plated vacuum mounted. All frequencies at one Price—**10/- each.**

CO-AXIAL CABLE

72 ohm Co-axial Cable, UR70, 3/16" diameter, 27 yd. Rolls **£1** including connectors, or **10d. yd.**

WANTED TO BUY

Receivers, Xmitters, Test Gear, etc. Prompt Cash paid.

UNITED TRADE SALES PTY. LTD.

280 LONSDALE ST., MELBOURNE, VIC. (Opp. Myers) Phone 32-3815

(4) When the current taken from a power supply is varied, the voltage of the supply varies in opposite sympathy by a degree depending upon the regulation of the supply.

(5) The frequency of the v.f.o. is dependent upon its h.t. voltage.

Thus it can be seen that poor regulation and consequent interaction can lead to downward modulation (p.a. voltage reduced on speech peaks), frequency modulation and certain types of instability. Effects upon the v.f.o. frequency are reduced by stabilisation using a gas stabiliser, but this is only effective at very low frequencies, and adequate decoupling is also required.

Ideally, then, the three h.t. supplies should be independent of one another. Fig. 5 shows one way in which they may be combined without unduly affecting the performance. The circuit does not call for very much comment. Conservatively rated components, at least as specified, must be used; and the hardware and general mechanical design of the power pack should be chosen bearing in mind the high voltages present.

Silicon rectifiers are used for the p.a. supply in order to obtain good regulation, which is necessary if the stage is to be modulated correctly. A valve would probably be quite satisfactory, provided that its emission is not low and the transformer and choke are of good quality. If desired, of course, silicon rectifiers of suitable rating could be used instead of V1 and V2, but they would be very much more expensive. The transformer T1 need not all be one unit, of course, but could consist of several separate transformers with their primaries wired in parallel.

Mains dropper resistors in the primary of the transformer must be avoided as it will lead to interaction between the outputs. A surge limiter, such as Brimistor (R11) may, however, be found necessary to prevent the fuses from blowing when the equipment is first switched on.

The chokes Ch.1-Ch.4 must be low resistance types of good quality; the potted C-core type are recommended. The mains filter should be built in a small screened box, with good earth connections. Its purpose is to prevent t.v.i. from occurring by conduction through the mains.

PORTABLE AND MOBILE OPERATION

If sufficient space is available, the transmitter may be used portable or mobile in the form described. The power consumption (and, of course, the output) can be reduced by suitable adjustment of the h.t. supply voltages.

However, if the transmitter is to be built specifically for this application, there are several small modifications that can be made to reduce both the size and power consumption.

The first is to cut the power input to 30 watts or less and use EL84s in the modulator. The necessary changes of component values are given in Table 1, and the p.a. h.t. supply should be lowered to about 350 volts. In view of the small physical size of the 6146, there is no point in replacing it by another valve. The heat generated is reduced by the lower power input. These modifications permit considerable reductions in power consumption and the sizes of the modulator and p.a. compartments. It is recommended that the smaller Geloso or Codar mobile pi-coil units be used in the QRP version.

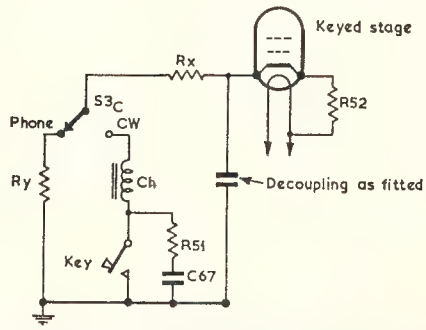

Fig. 6.—Keying circuit for the G3RKK transmitter, when breaking V5 cathode; C67, 1.5 μF.; R51, 100 ohms; R52, 220K 1w.; Ry equals d.c. resistance of Ch.; Rx plus Ry equals cathode res. as originally fitted; Ch., 2 Hy. 100 mA. If keying at V4: C67 is 1.0 μF. and Ch. is 5 Hy. 20 mA. See circuits of transmitter for references.

It may also be advisable to use a relay in preference to a valve for protection of the p.a. The circuit is the usual one. As the load on the r.f. section heater supplies is reduced, PL1 should be removed to restore the balance for 12.6v. operating, resulting in a saving of 6 watts.

If (for mobile use) a phone-only design is required, further reductions in size may be achieved by omitting the phone/c.w. switching. It is not recommended that the exciter section be made smaller than suggested, but with careful design the other compartments could all be reduced in size, the limiting factor being ventilation for the required power input.

SETTING UP

When construction is complete, after a thorough check of the wiring has been made and all loose ends and solder have been dislodged from the wiring, the initial testing can be begun.

After fitting the valves and switching on the heater supplies, the main supply cable and non-reactive dummy load may be connected. The dummy load can consist of a number of carbon resistors connected in parallel.

First F1 should be removed and the exciter h.t. only switched on. L1 and L2 are set to give the required coverage, using a calibrated receiver to pick up the output of the v.f.o., and the coils

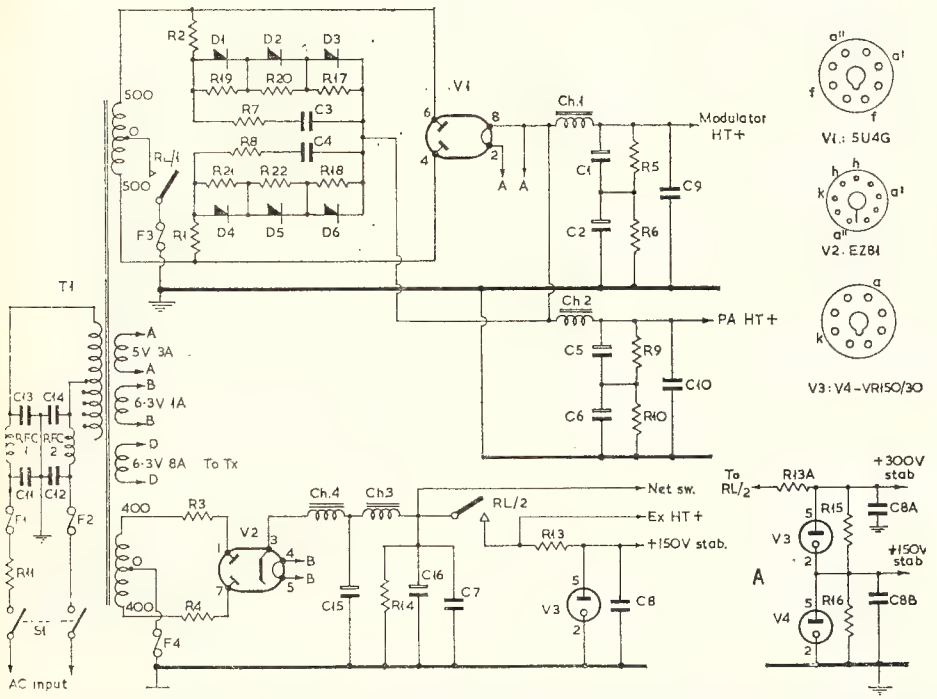

Fig. 5.—A power supply layout for the a.m./c.w. transmitter described in the article by G3RKK, giving all voltages and currents required and incorporating the necessary precautions against t.v.i. Of course, provided the loadings can be met, any other sort of power supply would be equally suitable, though the control and change-over system would have to conform to the circuitry around RL1, RL2 in this diagram. Conversely, this p.s.u. arrangement could be adopted for other types of AT-station equipment calling for about the same sort of loading.

C1, C2, C5, C6—32 μF., 450v.
C3, C4—0.02 μF., 1 kV.
C7, C8—0.01 μF., 500v.
C9, C10—0.01 μF., 1 kV.
C11, C12, C13, C14—0.01 μF., 300v. a.c.
C15, C16—16 plus 16 μF., 600v.

R1, R2—47 ohms, 2w.
R3, R4—100 ohms, 2w.
R5, R6, R9, R10—39K ohms, 2w.
R7, R8—10K ohms, 2w.
R11—1 amp. Brimistor, type CZ11.
R13—4.7K ohms, 5w.
R13A—470 ohms.
R14—82K ohms, 2w.
R15, R16, R17, R18, R19, R20, R21, R22—470K ohms.

Ch1, Ch2—20 Hy., 150 mA.
Ch3, Ch4—20 Hy., 80 mA.
T1—Prim.: 200-250v.; Sec.: 500-0-500v. 250 mA., 400-0-400v. 80 mA., 6.3v. 8 amp., 6.3v. 1 amp., 5.0v. 3 amp.
Ry1, Ry2—Relay coil to suit Tx/Rx switching, with 500v. 250 mA. contacts.
RFC1, RFC2—1.5 mH., 1 amp., mains type.
F1, F2—2 amp. fuses, anti-surge.
F3—500 mA. fuse.
F4—200 mA. fuse.
S1—D.p.d.t., 250v. a.c., 2 amp.
D1, D2, D3, D4, D5, D6—800 p.i.v. silicon rect., 200 mA.
V1—5U4G, or similar.
V2—EZ81.
V3, V4—VR150/30, or similar.

and wideband couplers are then aligned in turn to give maximum V5 grid current. The wideband couplers must be adjusted to produce, as far as possible, constant output over the entire band. Small 1-10 pF. air trimmers connected across the "hot" ends of the wideband couplers are helpful in obtaining the best performance.

The screen resistor of the v.f.o. (R3) must then be adjusted on the 80 and 40 metre ranges so that reliable oscillation is just obtained on both bands without falling off at the edges. For convenience it may be noted that the strongest oscillation is obtained with a value of about 22K, the gain decreasing as the value is increased. A d.c. voltmeter connected from the grid of V3 to earth via an r.f. choke at the probe end is a useful output indicator. Having done this, C12 is then adjusted so that the maximum output is obtained without driving V2 into grid current. Increasing the drive to V2 further will adversely affect the stability without a significant increase in the drive to the p.a.

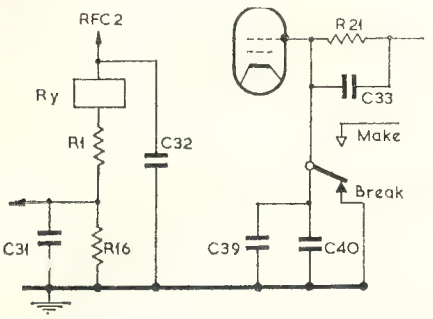

Fig. 7.—When the G3RKK Tx is used mobile or portable, the p.a. clamping circuit can be by relay, as shown here and originally described by G3LWM in Dec. 1963, "Short Wave Magazine". Condensers C31, C32, C33, C39, C40 and R16, R21 are as fitted in Fig. 3. In the circuit above, R1 is 18K, to equal the d.c. resistance of Ry (R1 and Ry replace R15) and Ry is any relay with a 2 mA. coil, having contacts rated at the control voltages involved.

With both bandswitches put to 80 metres and VR1 set to give 2.8 mA. grid current, the p.a. can be switched on. It should be possible to load it so that the cathode current dips from about 130 to 110 mA. as C47 is tuned through resonance.

With the v.f.o. valve removed, V6 should hold the anode current of V5 to about 30 mA. Under these conditions C28, C47 and C48 should all be rocked from side to side. If the p.a. is stable, no variations in anode current should occur and, of course, no grid current should be registered. Also, under normal conditions, variations of grid current when the anode circuit is tuned through resonance should be very slight and minimised by adjustment of the neutralisation control if fitted. The voltages at the points given in Table 2 should be measured, and the circuit conditions adjusted if any differ by more than about 10 per cent.

When the r.f. section is functioning correctly the modulator may be set up. With the p.a. still running into a dummy load, an audio oscillator with a frequency of about 400-2,000 c.p.s. should be fed into the microphone socket and VR2 adjusted to give about 95 per cent. modulation. The a.c. voltages from the grids of V9 and V10 to earth should now be measured using a valve voltmeter or a good rectifier type multimeter and VR3 adjusted until they are identical.

With a microphone now connected, the volume control should be adjusted so that 95 per cent. modulation is just reached on speech peaks. This condition must be maintained whenever the transmitter is used.

The t.v.i. trap is best aligned by very loosely coupling the output of the transmitter to the aerial socket of a t.v. receiver tuned to the local t.v. channel —in the sense of "showing it some r.f."

TABLE 2

For assistance in fault finding and setting up, a number of voltage readings taken on the author's transmitter are given below. They are only intended as a rough guide, but will give some idea of what to expect. In particular, they will have to be intelligently adjusted if different h.t. voltages are used.

Measurement Conditions: Bandswitches in 20 metre position. A.f. gain at minimum. Transmitter correctly tuned and loaded into a dummy aerial. Meter sensitivity 10,000 ohms per volt. 500, 25 or 5 volt range as applicable. All are d.c. voltages to chassis.

HT	End of R3	150v.
V1	Anode	80v.
	Screen	50v.
V2	Anode	300v.
	Screen	280v.
	Cathode	6v.
V3	Anode	270v.
	Screen	0-270v.
	Cathode	1v.
V4	Anode	320v.
	Screen	270v.
	Cathode	8v.
V5	Anode .... (H.t. end of RFC3)	450v.
V5	Screen .... (This is critical)	150v.
	Cathode	9v.
V6	Grid	—50v.
V7	Anode	80v.
	Screen	90v.
	Cathode	2v.
V8	Anodes	200v.
	Cathodes	2v.
V9	Anodes	400v.
V10	Screens	270v.
	Cathodes	—22v.
Junction R27, R28		300v.
Junction R28, R39		330v.

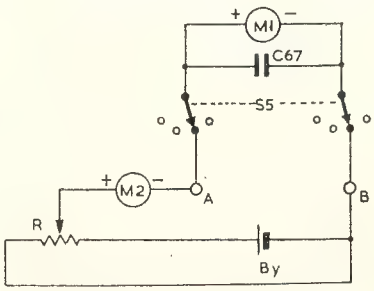

Fig. 8—Setting up the meter shunts for the H.F.-Band Tx. This takes care of all necessary checks and measurements. See Table 2.

—and adjusting C49 for minimum interference.

When loading up the transmitter, the best procedure is first to adjust C47 for a dip in anode current with the dummy load connected. C48 is then tuned for maximum r.f. output, and the procedure repeated until no further improvement can be obtained. The loading may then have to be reduced very slightly to give the best modulation characteristics. Then connect the main aerial and adjust the aerial tuning unit for maximum output, using an absorption wavemeter or s.w.r. meter as indicator (the latter is to be preferred). A well matched coax.-coupled beam or dipole may be fed directly from the output socket of the transmitter.

When first setting up the exciter and noting the approximate setting of C47 and C48 for the higher frequency bands, it is as well to use an absorption wavemeter to make sure that none of the tuned circuits is set up on the wrong harmonic.

The transmitter as described and illustrated here has now been in operation at G3RKK, with several different v.f.o. systems, over a period of six months, and reports on stability, speech quality and general performance have been most favourable. All that is required now is an aerial system that will do justice to it!

The writer hopes that anyone who copies this design will have many years of trouble-free service from it, and that other readers will at least have found something in this article to interest them. ●

☆

HIGGINBOTHAM AWARD

The Publications Committee decided that as no technical article for 1964 merited the award, it would be better to broaden the scope of this prize to include meritorious service towards "Amateur Radio," and so the Committee are very pleased to announce that **Warwick Parsons**, VK5PS, has received the first Higginbotham Award.

It is very fitting that two men who have both contributed to "Amateur Radio" over such a long time should be named together.

Much could be said regarding Warwick Parsons, better known as "PanSy," but it is perhaps best summed up by the statement that this man has, over many years, devoted much time, has contributed towards, and has given assistance and pleasure to many Amateurs and readers of "A.R." During these years his own personal life has not been free from many problems, yet he has continued to provide a regular flow of Divisional news, much to the enjoyment of readers.

The Committee congratulates Warwick for his service to "Amateur Radio."

☆

ERRATA

Readers are asked to amend the Australian D.X.C.C. Countries List ("A.R.," January 1965) as follows:

Add: 9M2 (prior 16/9/63), Malaya.

Delete 9K3, Kuwait-Saudi Arabia, N.Z.

TRANSMITTER FOR 70 CENTIMETRES*

PRACTICAL DESIGN FOR UP TO 10 WATTS R.F. OUTPUT

THE circuit here is of a 70-centimetre transmitter designed by G3NNG and shown in the February issue of "QAV," of the Harwell (A.E.R.E.) Club group. Capable of an output of 8-10 watts on 432 Mc., the DET24 is in a resonant cavity, details of which are given in Fig. 2.

In some notes on the circuit, G3NNG makes the following points: All earthy pins should be soldered direct to chassis and the wiring kept short and direct. The first A2521 could be replaced by an E180F with only a slight reduction in output. A good screen should be soldered across V3 and V4 sockets to isolate inputs from outputs. In the case of V4, the screen forms part of the trough for L5.

R.f. chokes must be used as specified, and both heater leads of V3 and V4 need to have chokes wound to the dimensions given for RFC1; similarly, the heater side of V5 has chokes as specified for RFC4.

Grid drive is controlled by R11, and is set for maximum output at anode currents up to 12 mA.; about ¾-watt of drive should be available for the p.a.

* Reprinted from "The Short Wave Magazine," May, 1964.

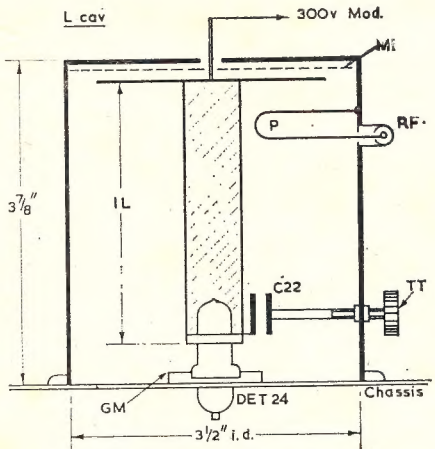

Fig. 2.—Cavity Resonator.

IL — Inner line, 1-in. o.d., with 1/16th-in. wall, brass or copper.
GM — Grid mounting, 1½-in. diameter brass ring insulated by one-thous. melinex or mica from chassis, forming C21.
TT — Tank Tuning, discs of ⅞-in. diam. brass on 4BA rod, forming C22.
MI — Mica/Melinex Insulator, 1½-2 thous.
P — Probe, for taking off r.f.
Notes: Construction can be in brass or copper. Anode of DET24 clamped by disc to line to keep seal cool. Outer cavity 3½ ins. inside diameter by 3⅞ ins. long. P.a. h.t. fed to rod fixed to inner line.

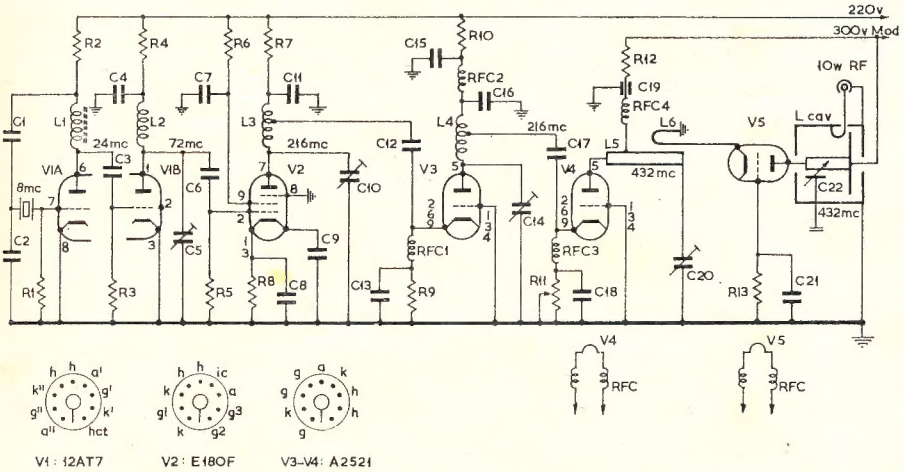

Fig. 1.—Circuit of the 430 Mc. Transmitter designed by G3NNG, with a DET24 in a cavity resonator (see Fig. 2) as the straight-driven p.a. (V5), capable of up to 10 watts r.f. output. Note that modulation is applied simultaneously to the anodes of driver and amplifier. This has been a particularly successful 70-centimetre transmitter design for the Harwell Club group, having won them three 430 Mc. contests during 1963. Note that in this circuit V3 should also be shown as taking heater chokes.

C1, C19 — 0.001 μF.
C2, C3 — 47 pF.
C4, C7, C8, C9, C11, C13, C15, C16, C18 — 0.005 μF.
C5, C10, C14, C20 — 2-8 pF. tuning trimmers.
C6 — 22 pF.
C12 — 220 pF.
C17 — 100 pF.
C21 — See Fig. 2.
C22 — Tank tune, see Fig. 2.
R1 — 12,000 ohms.
R2, R7 — 4,700 ohms.
R3, R5 — 33,000 ohms.
R4 — 1,000 ohms.
R6 — 22,000 ohms.
R8, R13 — 100 ohms.
R9 — 120 ohms.
R10 — 2,200 ohms.
R11 — 5,000-ohm drive potentiometer.
R12 — 8,200 ohms.
V1A, V1B — 12AT7.
V2 — E180F.
V3, V4 — A2521.
V5 — DET24.
L1—24 Mc.: 18 turns 26g., ⅜-in. diam., slug-tuned.
L2—72 Mc.: 4 turns 20g., ½-in. diam. by ½-in. long.
L3—216 Mc.: 1½ turns 20g., ⅜-in. diam., tap ¼-in. from cold end.
L4—216 Mc.: One turn 20g., ½-in. diam., with ½-in. anode lead. Tap ⅛-in. from cold end.
L5—432 Mc.: 5½-in. length of ⅛-in. diam. copper rod in one-inch square trough; h.t. tap 2 ins. from anode.
L6—Link, L5: Hairpin 1½-ins. long by ½-in. wide, 20g., placed ¼-in. above centre L5
Lcav—432 Mc. Cavity: See sketch Fig. 2.
RFC1, RFC2, RFC3—20-in. length of 24g. enamelled, wound to ⅜-in. diam. to be self-supporting.
RFC4—As RFC1, but 10 in. length 24g.
Note: R.f. chokes as RFC1 als in heaters V3, V4; as RFC4 in heater of V5.

The DET24 grid is mounted in a brass ring which is insulated from chassis by mica or melinex sheet to form the decoupling capacity C21. Care must be taken to ensure that no excessive mechanical strain is placed on the valve in its mounting, or the glass-metal seals may break. The key to the construction of the cavity is given with Fig. 2.

G3NNG reports that this neat design has been in use for about 18 months with reliable and most satisfactory results—indeed, all who may have worked the Harwell group on 70 Cm. field day occasions will have heard this particular transmitter, which won the A.E.R.E. boys three 430 Mc. contests during 1963. So it does work! ●

☆

MODIFICATIONS TO THE 522

(Continued from Page 3)

This amount of C did not give enough variation to compensate for the average crystal to be brought to the net frequency.

It might be added that unless the final frequency is within 1,000 cycles of the net frequency copiability is rapidly lost when the distances between mobile and base are increased beyond approximately five miles.

When the frequencies are netted within this amount the range is considerably extended, particularly under weak signal conditions.

Also, unless the ratio detector or discriminator is at centre net frequency in a mobile vehicle, ignition and electrical hash will not be rejected by the discriminator, which will also tend to make the received signal uncopiable.

After experimenting with several crystal oscillator circuits, the original circuit was modified to the accompanying circuit and has been found to provide the best results to date, consistent with output and giving frequency variation of approximately 500 cycles at the crystal fundamental frequency without putting the oscillator out of oscillation.

Providing the crystals are slightly high in frequency to start with, this frequency shift at the fundamental, multiplied by 18 times, is sufficient to adjust the crystals to the net frequency.

It is hoped that this further information may help to avoid some of the teething troubles of multi-channel operation which have been experienced in the modification of this equipment at this QTH, when more than one channel operation is necessary—as it has become in Melbourne recently.

This modified unit has been in operation for some considerable time as a base unit and has been left running on the 145.854 Mc. VK3 channel A frequency almost continuously while in the shack, with excellent results on all other channels, and has proved to be comparable with the commercial 10-watt f.m. mobile unit. ●

AMATEUR FREQUENCIES:

ONLY THE STRONG GO ON—
SO SHOULD A LOT MORE
AMATEURS!

NEW TIME SIGNAL SERVICE

A new time signal service, broadcast to all parts of Australia by short wave, has been introduced by the Australian Post Office.

The signals, broadcast from Post Office transmitters at Lyndhurst in Victoria, are sent out each second, 24 hours a day, except for short breaks for transmitter and frequency changes.

The signals are a series of pips sent out at one-second intervals with the minutes marked by the elimination of the 59th pip of each minute. A recorded voice identifies the station, VNG, during the first minute of each hour.

The signals are generated by special equipment designed and produced by the Post Office Research Laboratories and are accurate to better than one hundredth of a second.

The equipment is housed at the Department's speaking clock installation at the City West Telephone Exchange in Melbourne, and is connected to Lyndhurst by land line.

The service is broadcast on frequencies of **5425 Kc.** and **7515 Kc.** between 10.15 p.m. and 8 a.m., and on **7515 Kc.** and **12005 Kc.** between 8.15 a.m. and 10 p.m. This ensures a day and night coverage throughout practically all areas of Australia.

Repairs to Receivers, Transmitters; constructing and testing; xtal conv., any frequency; Q5-ers, R9-ers, and transistorised equipment.

ECCLESTON ELECTRONICS

146a Cotham Rd., Kew, Vic. Ph. 80-3777

TRANSMITTING COMPONENTS

Stocks Famous American Components

See adverts. in "Amateur Radio," Feb./Jul. '64

JAMES BERRY & COMPANY

Melb. at 1.10 and 5.30, 343 Lit. Collins Street. Syd. 10 a.m.-3 p.m., Daking House, Rawson Pl.

SILICON DIODES

Guaranteed, Tax Paid, Post Free.

Amps.:	0.4	0.75	1.5	3.0	20.0
50v.:			3/6	4/6	
100v.:		2/-		5/-	20/6
200v.:			4/-	5/6	23/6
400v.:	4/-			7/6	26/-
500v.:		5/9			
600v.:	5/9				
700v..		8/6			
800v.:	7/-				

900-1500v.: Enquire for our low prices.

Germanium: V.h.f. Point Contact 2/9 ea. 50v./1a. Junction type 2/- ea.

Many other ratings available. S.A.E. for Cat. **Minimum Order:** ten diodes; can be assorted.

Please: Orders by post only!

Electronics Associates

76 VIEW ST., HOBART, TAS.

NEW CALL SIGNS

OCTOBER, 1964

VK1UN—J. A. Robb, 25 Discovery St., Red Hill, A.C.T.
VK2BAF—S. E. Hodgins, Highway Motel, Holbrook.
VK2BCL—R. A. Love, Flat 1, 15 Hereward St., Maroubra.
VK2BEN—J. D. Blalock, 7 Thorpe Ave., Queanbeyan.
VK2BPY—P. R. Young, 2 Iredale Ave., Cremorne.
VK2ZHJ—J. F. Heron, Collwood Cres., Orange.
VK2ZMF—M. K. Francis, Hill St., Scone.
VK2ZMQ—S. K. McCarthy, 71 Como Pde., Como.
VK2ZNN—N. C. Nugen, 24 Carrington Pde., Harbord.
VK2ZOC—K. C. Oldroyd, 82 Hilma St., Collaroy Plateau.
VK2ZZW—P. R. Wellings, 5 Leumeah St., Cronulla.
VK3FU—L. E. Thorne, Station: 8 Walter St., Ascot Vale; Postal: C/o. Containers Ltd., 240 Geelong Rd., West Footscray.
VK3PN—C. K. Constable, 84 Cityview Rd., North Balwyn.
VK3QA—R. D. Glasser, 306 Wattletree Rd., Malvern.
VK3QF—T. N. Diviney, 3 Dalny Rd., Murrumbeena.
VK3YH—R. R. Howe, 9 Howell Drive, Mt. Waverley.
VK3ADO—A. Duckworth, 75 Wilson St., Middle Brighton.
VK3AFZ—E. H. S. Foot, Station: 79 Elwers Rd., Rosebud; Postal: 22 Laurel Ave., Boronia.
VK3AVK—N. O. Duncan, 13 Kenbry Rd., Heathmont.
VK3AYO—M. T. Webster, 79 Pearson St., Sale.
VK3ZBJ—G. S. Jennings, 555 High Street Rd., Mt. Waverley.
VK3ZFG—A. E. Hiscock, 3 Whitmuir Rd., Bentleigh.
VK3ZHA—E. P. Blake, 62 Riddel Pde., Elsternwick.
VK3ZHL—G. H. Loft, 36 Hopwood St., Echuca.
VK4IL—A. G. Lewis, 30 Bates St., Bundaberg.
VK4ZHB—F. H. Birkbeck, Flat 2, Haymarket St., Hyde Park, Townsville.
VK4ZJP—J. S. Perryn, 39 Woondooma St., Bundaberg.
VK4ZLT—L. O. Tully, 120 Victoria St., Fairfield.
VK4ZMG—G. W. McLucas, Station: 323 Bourbong St., Bundaberg; Postal: P.O. Box 510, Bundaberg.
VK4ZRW—R. C. Wright, 119 Elliott Heads Rd., Bundaberg.
VK5AU—W. E. Catchpoole, 74 Church Tce., Walkerville.
VK5NC—K. G. Ellis, B.C.A. Society, Control Station, Ceduna.
VK5OL—R. E. Maricle, 1 Stanhope St., West Beach.
VK5ZRW—R. W. Humphrys, C/o. S.A. Railways, Lyndoch.
VK5ZRS—R. S. Langhans, 32 Parry Ave., Somerton Park.
VK5ZHH—M. K. Rogers, 30 Portland Ave., Darlington.
VK5ZJC—J. C. Vayne, O'Loughlin Tce., Ceduna.
VK6ZEJ—J. K. Holt, 218 Flinders St., Mt. Yokine.
VK7ZLP—L. A. Pretty, 16 Garden Gr., Launceston.
VK7ZRS—R. E. Schulze, Valley Rd., Devonport.
VK7FG—C. H. Ranft, 12 Lime St., Launceston.
VK7ZGM—G. P. Casson-Medhurst, 9 Beach Rd., Sandy Bay.

Stockists of Radio and Electronic Components for the Amateur Constructor and Hobbyist

First Ring, Write or Call on

WILLIAM WILLIS & Co. Pty. Ltd.

428 Elizabeth St., Melb'ne. Ph. 34-6539

GELOSO 222 Transmitter, 80-10 mx, mint condition, £60. Phone 314-6760, VK3AHT.

SWAN 120 Tribander, in-built speaker, covers 3.55 to 3.6 Mc., 7.0 to 7.15 Mc. and 14.05 to 14.35 Mc. Instruction book and factory packing. Good condition and in current use. Price £150. VK3ARP, WL 1184 or write 7 Kyora Pde., North Balwyn, Vic.

HAMADS

Minimum 5/-, for thirty words. Extra words, 2d. each.

Advertisements under this heading will be accepted only from Amateurs and S.w.l's. The Publishers reserve the right to reject any advertising which, in their opinion, is of a commercial nature. **Copy** must be received at **P.O. Box 36, East Melbourne, C.2, Vic.,** by **8th of the month** and **remittance should accompany** the advertisement.

COMPLETE 10-80 mx 150-watt s.s.b. station. Heathkit s.s.b. adaptor, two 6DQ5s linear, vox, u.s.b./l.s.b., power supplies. AR7, product detector, spare coil boxes. All in 3 ft. standard rack. Other gear. See operating. £100 o.n.o. J. Mabbitt, 198 Foote St., Templestowe, Victoria.

FOR SALE: Complete Table-Top Station consisting of Hallicrafter HT37 a.m., s.s.b., 10-80 mx; Rx Drake 2B. Both these units as new, having very little use. Owner going QRT. £500. J. Martin, P.O. Box 239, Bairnsdale, Victoria.

FOR SALE: Cossor Scope, model 1039M, good condition, 2¾" tube, 5-step time base, 10 c/s. to 50 kc.; sync.; Y ampfl. gain: 75, 25 c/s. to 120 kc.. 20. 25 c/s. to 1.5 Mc., 30% down. £40 or best. K. Aggett, 2/9 Allen St., Glebe, Sydney, N.S.W.

FOR SALE: Hallicrafters model SX111, selectable sideband receiver, a.m., c.w., s.s.b., double conversion, selectivity 0.5 to 5 kc., six Amateur bands, 3.5 to 28 Mc., plus 10 Mc. band for WWV, 100 kc. crystal calibrator, factory condition, £200. Geloso Transmitter, type G222TR, 6146 final, plate modulated, 3.5 to 28.0 Mc., perfect condition, £75. H. Watts, 4a Phillip St., Toowoomba, Qld.

FOR SALE: Hammarlund HQ140-XA Receiver, 500 Kc.-30 Mc., bandspread 80-10 mx., Kokusai mechanical filter with switched crystal b.f.o. giving excellent s.s.b. reception, 100 kc. crystal cal., S meter, good condition, £120. VK2AXB, 114 Attunga Rd., Newport, N.S.W.

SELL: "Courier" 16-tube s.s.b. Transceiver, Collins mechanical filter, parallel 6146s linear, 14 Mc. compact p.t.t. good DX getter, with tubes, manual, no power supply, £100. VK4DO, Hobler, 190 High St., Rockhampton, Queensland.

SELL: Odd parts—engraved panel R. & H. July '62 Rx, somewhat modified; VCR138A c.r.t.; valves two 6SH7s, 6J5, 1K5G, 3S4, 80, 1R5, 1Q5GT, 1T4, 6AU6 with socket, shield, 6SN7GT, 10 other miniatures of unknown origin; Tranny, 150 a side at 30 mA., 6.3 at 2a.; Caps.: 2 x 4 μF. at 240 v.a.c., 2,000 μF. at 12v., 500 μF. at 12v., 150 μF. at 50v.; old radio containing 47, 2 x 57, 3 x 1 μF. at 1 kV. block, 3 x 0.25 μF. at 1 kV. block, electro-mag. speaker, large chassis, etc., good for parts only. £7 the lot or offer. Wanted: 3 el. 20 mx, pref. with rotator and feeders. Offers to WIA-L5067, 12 Fuller St., Walkerville, S.A. Ring 65-2050.

• TRANSISTOR IGNITION SYSTEMS

Mark 2 Hi-Fire—Ready to use, complete one-piece unit:

Positive Earth **£23/18/0**

Negative Earth **£22/10/0**

Plus 12½% Sales Tax. Pack & Post 5/-.

Please state whether 6 or 12 volt required. Enquiries welcomed for Tachometers, complete or in kit form.

• RADAR TELEVISION TRANSFORMERS

Available from stock: Line output and Frame Output to suit all makes. Changeover Service available on L.O.P. Power and F.O.P. Transformers. Write or call for lists.

• V.U. METERS

VR-3P 3¼" Square. Scaled —20 to +3 at—

70/-

Sales Tax Exempt. Pack & Post 1/-.

E.W.16—Edge Reading Style 3¼" x 1". Scaled —20 to +3 at—

85/-

Sales Tax Exempt. Pack & Post 1/-.

WARBURTON FRANKI

• TRANSFORMER RECTIFIER SETS

A. & R. Transformer and Matching Contact Cooled Rectifier. **Output**: 250 v.d.c. at 60 mA. Much cheaper than ordinary transformers using valve rectifiers, or silicon diodes. Suitable for instruments, radios, amplifiers, etc.

36/- set + S.T. 12½%

ALSO—

Low Voltage Sets—Transformer and Rectifier to give output of 12-15 volts at 2 amps. Suitable for model trains, transistor radio power supplies, etc.

41/- set + S.T. 12½%

• SILICON DIODES

400 P.I.V. at 1 amp.

Made in U.S.A.

6/3 each + S.T. 25% or

70/- doz. + S.T.

SPECIAL OFFER—

Lots of 50

£13/10/0 + S.T.

• TRANSFORMERS

Prim.: 240v., Sec.: 900v. at 100 mA.

Housed in heavy metal case with mounting feet 8½" x 4" x 2½". Flying lead connections. Weight 11½ lbs. Few only to clear at—

35/-

including Sales Tax. Plus Freight.

• GRID DIP OSCILLATORS

"Q" Max, Model GDO-2

Made in England

Eight Frequency Ranges from 1.5 Mc. to 300 Mc. May also be used as:

1. Absorption Wavemeter.
2. Phone Monitor.
3. Oscillating Detector.
4. Signal Generator.

£30/7/6

Plus 12½% Sales Tax. Pack and Post 2/6

• 50,000 O.P.V. MULTIMETER BARGAIN

Sakura TR-18 measures—

A.C./D.C. Volts to 1,000.
D.C. Current to 250 mA.
Resistance to 10 megohms.
Decibel Scales: —20 to +22.
+20 to +36.
Capacitance: 0.001 to 0.1 μF.
Inductance: 10 H. to 500 H.

£8/10/0

Plus 12½% Sales Tax. Pack & Post 2/-.

• PANEL METERS

MR2P—Size: 1⅝" Square:—

0-1 mA. .... **29/6** S.T. exempt
0-500 uA. .. .... **31/6** „ „
0-50 uA. .. .... **45/-** „ „

Plus Pack and Post 1/- each.

• PROTECT your premises with the SCOTT ELECTRONIC EYE

A.C. mains operated. Kit consists of Light Source and Eye Unit. Complete with power supply, amplifier, buzzer, hardware and connecting wires. Use across doorway or other openings up to 25 ft. wide.

£16/13/4

Plus 12½% Sales Tax. Plus Postage for weight of 4 lbs.

WARBURTON FRANKI

220 PARK ST. SOUTH MELB., VIC. PHONE 30 lines **69-0151**

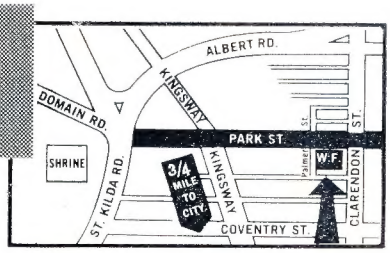

★ *TRADE ALSO SUPPLIED*

• *Please include postage and freight with all orders*

W.F.7

AWV 25LP4

THE NEW DIMENSION IN TELEVISION

- New aspect ratio which approximates to the standard film aspect ratio of 3:4; you see more of the picture.
- Greater width in relation to height gives a screen area 16.8% larger than a typical 23″ tube having the same height.
- Integral shaped plate-glass protective panel, resin-bonded to the tube face; specially-selected resin has the same refractive index as glass.
- Advanced AWV Premium Quality techniques ensure a product of the highest excellence and reliability.

AWV

AMALGAMATED WIRELESS VALVE CO. PTY. LTD.

SYDNEY MELBOURNE BRISBANE ADELAIDE